Proceedings of the 2nd Marine Energy Technology Symposium
METS2014
April 15-18, 2014, Seattle, WA

DEVELOPMENT OF AN ADAPTABLE MONITORING PACKAGE FOR MARINE RENEWABLE ENERGY PROJECTS
PART I: CONCEPTUAL DESIGN AND OPERATION

Ben Rush
University of Washington,
Applied Physics Laboratory
Seattle, WA, USA

James Joslin
University of Washington,
Northwest National Marine Renewable Energy Center
Seattle, WA, USA

Andrew Stewart
University of Washington,
Applied Physics Laboratory
Seattle, WA, USA

Brian Polagye*
University of Washington,
Northwest National Marine Renewable Energy Center
Seattle, WA, USA

ABSTRACT

Environmental monitoring of marine renewable energy projects is needed to reduce environmental uncertainties and enable sustainable commercial implementations. An Adaptable Monitoring Package (AMP), along with the support infrastructure required to perform maintenance of the AMP, is being developed to enable real-time environmental monitoring of marine renewable energy converters. The monitoring capabilities supported by the AMP include marine animal interactions with converters, noise levels, current and wave fields, and water quality. The core instrumentation on the AMP is comprised of a hybrid stereo-optical and acoustical camera system, a localizing hydrophone array, acoustic Doppler current profilers and velocimeters, a water quality sensor, cetacean click detector, and fish tag receiver. For an initial deployment to monitor a tidal turbine in deep water, the AMP is integrated into the converter structure and connected to shore via the turbine export cable, but can be disconnected and recovered for maintenance independently of the turbine. The AMP is deployed by a SeaEye Falcon inspection-class ROV and a custom tool skid. This paper describes the function, design, and dynamic stability of the AMP and deployment ROV. The conceptual design and approach to operations, to be confirmed through field testing, suggests that the AMP is likely to meet the need for high-bandwidth monitoring of marine renewable energy converters at an acceptable cost.

*Corresponding Author: bpolagye@uw.edu

INTRODUCTION

Marine renewable energy is a developing field with the potential to contribute significantly to regional energy needs. The potential environmental impacts of harnessing this energy remain uncertain and an objective of early demonstration projects is to investigate topics of concern and inform understanding of environmental risk. Recent workshops [1, 2] have identified priority areas for study and the instrumentation that is capable of performing these studies. However, the costs associated with conducting this environmental monitoring must be in line with the overall costs of the demonstration projects.

This paper presents the design and operations concept of a system that provides broad environmental data collection capabilities at moderate cost. The system is comprised of an Adaptable Monitoring Package (AMP) that integrates a flexible suite of instrumentation for near-field and long-range observations into a single, streamlined body and a deployment system that allows a SeaEye Falcon inspection-class ROV and custom tool skid dubbed the "Millennium" to deploy the AMP in the energetic conditions typical of wave and current energy sites. Figure 1 shows a representative model of the AMP and Millennium Fal-

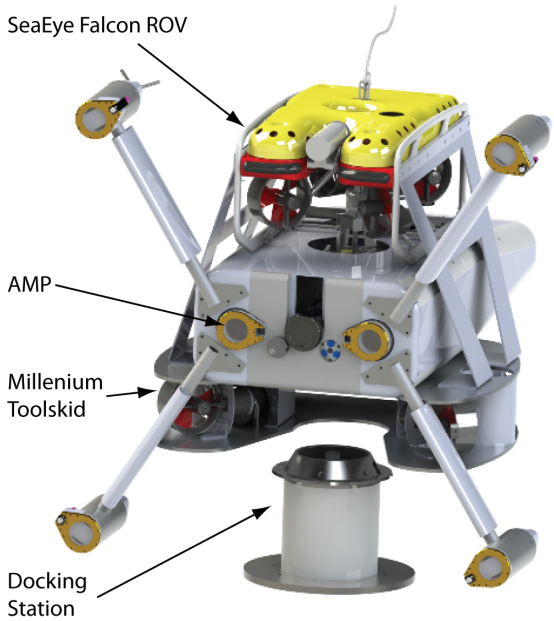

FIGURE 1. ADAPTABLE MONITORING PACKAGE WITH MILLENNIUM FALCON ROV DURING DEPLOYMENT

con deployment system.

Role for Integrated Instrumentation Packages

As discussed in [2], it is desirable to collect sufficient information about environmental risks to either identify impacts or responsibly "retire" those risks that are proven to be insignificant. Either of these risk end states will be decided by regional or national resource agencies, on the basis of available scientific information and regulatory mandate. However, reaching either end state is challenging for risks with a low probability of occurrence, but a severe outcome (e.g., animal mortality associated with collision) because they are difficult to observe. Theoretically, the most expedient approach towards establishing scientific information about these rare interactions is through spatially *comprehensive*, temporally *continuous* monitoring around marine energy converters. Even if the cost of instrumentation to execute this approach is neglected, the volume of data produced through this type of monitoring would likely result in a "data mortgage", whereby data are collected at a rate faster than they can be processed. For observations that might enable taxonomic classification of marine animals to the species levels (e.g., optical or acoustical imaging), this problem is particularly acute. Neither pure hardware nor pure software solutions are likely to be practical, but participants in expert workshops [2] have identified integrated instrumentation packages as an attractive middle ground. For example, an instrument with omnidirectional, real-time target detection capabilities (e.g., a localizing hydrophone array listening for marine mammals) could be used to trigger an instrument with higher-bandwidth and lower-aperture that requires archival data collection and future processing.

An integrated instrumentation package will need to support a range of instruments, some of which are likely to require power beyond the feasible limits of battery capacity and produce volumes of data beyond the feasible limits of local storage solutions. In such cases, a data and power connection to shore is required. While laying dedicated cables for instrumentation in wave and tidal energy environments is possible, this entails a high cost, particularly for cables with an intended life on the same order as the marine energy converter being monitored. If the instrumentation package can be integrated with the converter itself, then power and data services can be provided by ancillary circuits on the converter's own power export cable. This approach addresses the power and data bandwidth limitation associated with autonomous operation, but maintaining the instrumentation package becomes more difficult. This is particularly problematic when experimental monitoring technologies are deployed with a high probability of malfunction or need for adjustment after relatively short periods (e.g., several weeks between maintenance interventions). Possible maintenance options and their respective challenges include:

- *diver intervention*: extremely short working windows at depth; human safety concerns; high cost
- *ROV intervention*: short working windows; difficult to make more than minor modifications once deployed
- *converter recovery*: high cost (up to $1 M per intervention for some site-converter combinations); operational risk of converter damage
- *subsea winch w/ umbilical and slip ring* (enable package maintenance on surface without disconnecting from converter): high cost; winch failure during recovery/redeployment can cause catastrophic system failure
- *instrument package recovery with wet mate connection*: mating connection complicates deployment operations; high cost of wet mate connector

The Adaptable Monitoring Package (AMP) described here employs the final "plug and socket" architecture, whereby the AMP ("plug") mates with a port on, or in close proximity to, a marine energy converter ("socket") with data and power connectivity to shore. The mate consists of a securement system to lock the AMP to its docking station and a wet-mate power and data connection. This approach captures both the benefits of a cabled connection to shore and the adaptability of an autonomously operating package. As described in this paper, the AMP conceptual design lends itself to rapid deployment in a precise manner, reliable connection to shore power and data, and recovery with similar facility - all of which minimize the duration of a maintenance operation and surface vessel operational costs. Over the lifetime

of a project, only the "socket" remains in the water while the "plug" (AMP) is readily maintained or reconfigured at a shore facility.

Two projects that are likely to be early adopters of this technology are the Pacific Marine Energy Center (PMEC) for grid-connected wave energy converter testing off the coast of Newport, Oregon and the Snohomish County Public Utility District/OpenHydro tidal energy demonstration project in Admiralty Inlet, Puget Sound, Washington. Operating requirements for the AMP and deployment system are based on the tidal and coastal currents, water depths, and wave climates at these sites.

Requirements

General The "plug and socket" architecture drives the general system requirements, all of which must be achieved at acceptable economic cost. Specifically, the system must include:

- an ability to incorporate a range of instrumentation in a flexible and evolving manner over the lifetime of a marine energy demonstration project
- a mechanism to transport the AMP from a surface vessel to a docking station on a marine energy converter
- a mechanism to secure the AMP to the docking station against the large forces inherent to operation at wave and current energy sites
- a mechanism to mate and de-mate the connection to shore power and data
- an ability to recover the AMP, even in the event that shore power and data are interrupted
- a "socket" that will operate reliably for the duration of the demonstration project
- provisions to minimize complications associated with corrosion and biofouling on both the AMP (over a period of several months) and docking station (over a period of several years).

Tidal During operation at tidal energy sites, loads will be imparted to the AMP by the mean currents, storm surges, wave action, and turbulence. For deployments in relatively deep water, wave-induced orbital velocities may be negligible [3] and horizontal currents are likely to be several factors higher than vertical currents. This suggests an asymmetric drag profile will minimize design loads. AMP deployment and recovery will need to occur close to slack water for operational simplicity, but currents at tidal energy sites are never truly slack, with the reversal of currents out of phase between the surface and seabed. Water depths for environmental monitoring are likely to be greater than 15 m, but less than 100 m.

Wave During operation at wave energy sites, loads will be imparted to the AMP by a similar mix of metocean conditions, with wave orbital velocities dominating for near-surface deployments. Currents during deployment may still be substantial, even during periods with limited wave action [4]. Operational water depths may range from within a few meters of the surface to depths greater than 100 m.

DESIGN

Because the environmental monitoring objectives and instrumentation requirements are generally better defined for the Snohomish PUD/OpenHydro demonstration project than for PMEC, the initial conceptual design for the AMP is focused on integration with an OpenHydro tidal turbine. However, the design and operations concept could likely be extended, with minor adjustment to other tidal turbines and wave energy converters.

Operational Concept

The basic operational concept is to deploy the AMP using an ROV and recover it by an autonomous acoustic release. All operations are conducted around slack water, but with the current fully set in one direction. The AMP and ROV are driven against the current, such that in a loss of power scenario to either the surface vessel or ROV, the system would be pushed away from the turbine by the currents, rather than swept towards it. Similarly, the AMP and ROV system are trimmed slightly positive, such that the system will float back to the surface for recovery in the event that the umbilical fails. This operational concept is informed by several years of pre-installation data collection at this location using autonomous instrumentation packages.

Deployment of the AMP consists of the following steps:

- The AMP and ROV are coupled together and attached to a launch platform on a surface vessel. The launch platform is lowered to the approximate depth of the docking station on the turbine (a cantilever extending forward of the rotor swept area) and maneuvered by the surface vessel until it is in line with the docking station and at a distance of no more than 100 m.
- The ROV is powered on, lifts the AMP off the launch platform and transits to the docking station. (During this operation all instruments on the AMP are 'cold'. However, any velocity information being collected by the turbine systems or the surface vessel would be available to inform ROV operations.)
- The ROV clamps the AMP to the docking station and plugs in the wet mate connection. The AMP is then powered on and a basic instrumentation check is performed by the shore station.
- The ROV disengages from the AMP and is recovered to the surface vessel along with the launch platform.

Recovery of the AMP involves the actuation of an au-

tonomous acoustic release system by a surface vessel. This will disengage a recovery float that trails a load-bearing messenger line. The force imparted to the messenger line by the surface vessel will disengage the AMP from the docking station and return it to the surface. This approach increases the mechanical complexity of the AMP, but eliminates the need to re-engage the ROV and AMP at depth and reduces the duration/complexity of the recovery operation. This arrangement also allows the AMP to be recovered in the event that either shore power or data is interrupted. In the case of a release malfunction, the system is designed in a way that allows an ROV to disengage the clamping mechanism.

A distinguishing feature of this system is that deployment uses only an inspection-class ROV equipped with a customized tool skid. This approach retains the flexibility and maneuverability of an ROV-based solution without requiring the use of a work-class ROV. However, this also necessitates careful consideration of the hydrodynamics and stability of the combined AMP-ROV system in flight.

Overall, the concept of operations emphasizes rapid, well-defined maintenance interventions. The AMP can be recovered and exchanged with a turnaround unit within the same "slack" period. While regular, quarterly maintenance is anticipated, rapid mobilization for unplanned maintenance is considered in the system design. The recovery and redeployment process will require precise timing within the tidal cycle to maximize the operational window with acceptable currents. However, the telemetry from the acoustic Doppler current profiler on the AMP will allow the surface vessel to make a real-time decision about recovery feasibility, rather than requiring the vessel itself to be equipped with a Doppler current profiler.

Adaptable Monitoring Package

The following sections describe elements of the Adaptable Monitoring Package, including the instrumentation payload, power and communications architecture, securement system, and mechanical structure.

Instrumentation Payload A wide range of instrumentation may be used to conduct environmental monitoring of marine energy converters [2]. The AMP integrates a flexible suite of these instruments into a single streamlined body. The system architecture for the AMP, shown in Figure 2, is similar to that employed by cabled ocean observatories such as Neptune Canada [5] or Regional Scale Nodes [6], whereby multiple sensors connect back to a centralized node that has a shore connection for power and data.

The initial instrumentation incorporated into the AMP design is identified in Table 1. Most of these instruments, with the exception of the stereo-optical camera system, are commercially available. The development and initial evaluation of the camera system are described in [7]. The leading constraints on the AMP layout are associated with the minimum separation distance between hydrophones in the localizing array and between the strobes and optical cameras. Practical experience suggests that time-delay-of-arrival (TDOA) localization methods for mid- and high-frequency cetacean vocalizations will be most effective with at least one meter separation between the hydrophone elements in either a tetrahedral or three-dimensional "L" configuration [8]. Similarly, camera-strobe separation of one meter has been shown to reduce backscatter from biological flocculent [7, 9]. Both the optical and acoustical cameras, as well as other active acoustic instruments (e.g., echosounder, Doppler profiler), must also be oriented such that the regions or profiles of interest are within their fields of view. The remaining instruments generally require the exposure of a hydrophone element (e.g., C-POD click detector, Vemco fish tag receiver) or pump intake (e.g., CTDO) that do not have strict separation or directionality requirements.

Each of these instruments has been integrated into the structure in a way that respects the layout and orientation constraints (shown in Table 1) while optimizing hydrodynamic performance and maintaining a favorable distribution of mass and buoyancy. The overall rigidity of the system is similarly critical to performance of the stereo-optical and localizing sub-systems. While there is sufficient power and data bandwidth available to operate all instruments simultaneously, it is likely that these would be operated on a duty cycle or in a triggered mode to avoid generating cumbersome data streams or mutual interference (e.g., sound from the CTDO pump being received by the localizing array of hydrophones, acoustic interference between acoustical camera and Doppler profiler). The instrumentation payload is likely to be similar for monitoring of either wave converters or tidal turbines [2].

During operation, the AMP will remain in one of three pre-configured orientations relative to the flow: 0°, 50°, or 90°. At 0°, the camera system can view a portion of the rotor swept area and a large portion of the subsea base for artificial reef studies. At 50°, the portion of the rotor swept area in the camera field of view is maximized for studies of collision and strike. At 90°, the camera system is oriented to study aggregation in the turbine's wake. By adjusting the AMP's alignment features on the surface prior to deployment, the system orientation can be cycled among these positions during routine maintenance as part of an adaptive management program.

The conceptual AMP design balances the orientation and spacing constraints for each instrument against the need to maintain a low drag coefficient. For example, the strobe lamps are positioned at the end of cylindrical struts with free-rotating fairings that orient themselves with the dominant flow direction. This configuration reduces the drag during deployment and operation by minimizing the frontal area of the AMP, while maintaining the camera-light separation constraint. Other instruments (and

TABLE 1. MONITORING INSTRUMENTATION INCORPORATED IN THE INITIAL AMP DESIGN WITH MANUFACTURER, MONITORING CAPABILITIES, AND LAYOUT/ORIENTATION CONSTRAINTS

Instrument	Manufacturer	Monitoring Capabilities	Layout and Orientation Constraints
Stereo-Optical Camera System	Integrated System – UW Custom, Cameras – Allied Vision Tech., Strobes – Excelitas	Near-field marine animal interactions with turbine with potential for species-level identification	0.5 m camera separation, 1 m strobe/camera separation, must face region of interest
Acoustical Camera	BlueView P900-2250	Near-field marine animal detection with capabilities for optical camera triggering	Must face region of interest
Hydrophone Array	Integrated System - UW Custom, Digital Hydrophones - OceanSonics iCListen HF	Marine mammal localization and converter sound monitoring	$\geq$1 m separation between hydrophone elements
Acoustic Doppler current profiler	Nortek Aquadopp 1 MHz	Near-field current profiling to study inflow and wake	Must face towards profile of interest
Acoustic Doppler velocimeter	Nortek Vector	Near-field current point measurement to study inflow and wake turbulence	Sensor head unobstructed
Water quality	SeaBird 16+ v2 CTDO	Water quality and property observations	Unobstructed intake
Cetacean click detector	Chelonia C-POD	Harbor porpoise click detection	Exposed hydrophone element
Fish tag receiver	Vemco VR2W	Tracking of tagged fish	Exposed hydrophone element

electronics infrastructure) are housed within the main body of the AMP. Figure 3 shows the internal components of the AMP with fairings and frame components removed.

Biofouling on instrument optical ports is a concern for endurance. Mechanical wipers and copper rings are incorporated into the optical ports of cameras and strobes, which a recent study [10] demonstrated to prevent fouling over a multi-month period in conditions conducive to fouling (every system surface not similarly protected was heavily colonized by barnacles).

Power and Communications Architecture As shown in Figure 2, data collected by the AMP instrumentation will be streamed back to shore via a optic link (converter-to-shore distance is approximately 2 km). This requires that all data streams be compatible with fiber optic transmission. All instruments on the AMP either communicate natively over Ethernet protocol or interface with the Ethernet network via a network-addressable serial device. All traffic is aggregated onto a pair of Gigabit Ethernet channels (2 Gbps maximum throughput) and converted to fiber. A key question during the design process involved the decision of where to convert to fiber optic media. While several alternatives were considered (e.g., non-contact data and power transfer, copper wet-mate) a hybrid fiber and power wet-mate has been selected for its bandwidth and reliability. This ODI NRH connector is the same model used by the Regional Scale Node ocean observatory [6] and has been proven in oil and gas applications. The wet-mate provides four fiber optic channels (providing redundancy in the case that an optical fiber fails over the course of the turbine deployment) and over 1 kW of electrical power at 48 VDC. The AMP's main electronics bottle provides power conversion from the 48 VDC supply voltage to switchable instrumentation connectors at 12, 24, and 48 VDC, as described in Table 2. Nine RJ-45 Ethernet connections, three RS-232, and three RS-422/485 network addressable serial communications connections are available in the main bottle. Additional instruments can be integrated using secondary bottles (as for the passive acoustic subsystem) with

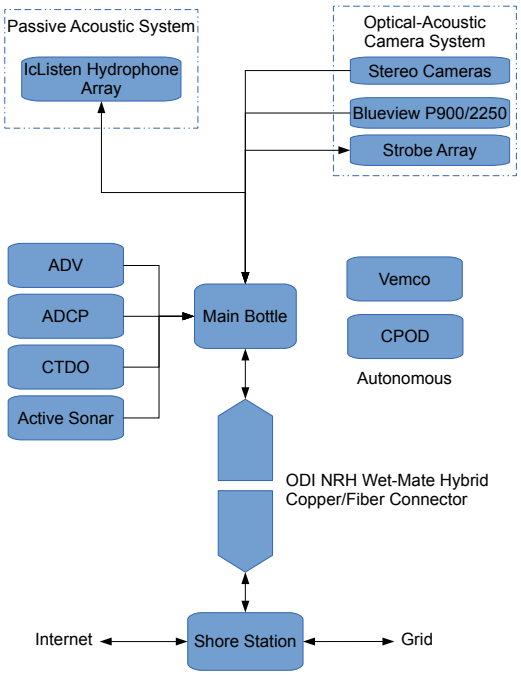

FIGURE 2. SYSTEM ARCHITECTURE FOR THE AMP WHILE DOCKED

Ethernet traffic aggregated and passed back to a single port in the main bottle.

TABLE 2. AMP POWER SUPPLIES FOR INSTRUMENTATION

Supply Voltage [VDC]	Rated Power [W]	Number of Connections
12	650	10 switched
24	20	2 switched
48	300	2 switched

Securement System and Docking Station The "plug and socket" architecture of the AMP relies on the ability to secure and release the package to and from a structure integrated with a marine energy converter. This is made possible with a securement system integrated into the AMP, and a docking station integrated with the converter. These components have been designed in tandem and have both coarse and fine alignment features to facilitate docking. The securement system module is shown in Figure 4 and the docking station appears in Figure 5. The securement mechanism is located at the center of the AMP body (as shown in Figure 3). During operation, loads on the AMP are transferred to the docking station through the securement assembly, motivating a central placement to minimize the moment induced by hydrodynamic forces.

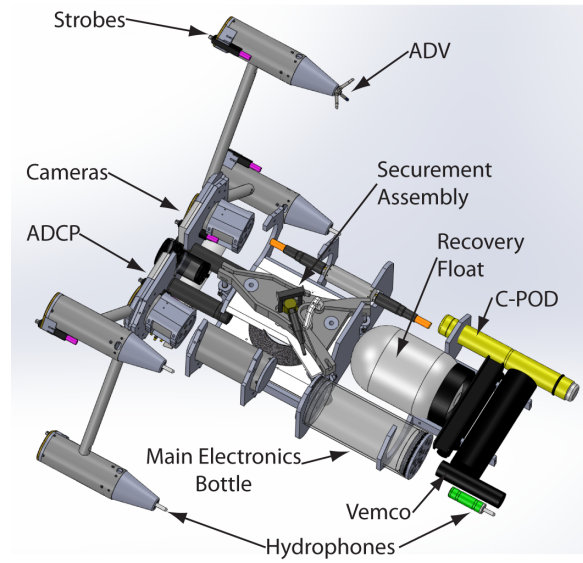

FIGURE 3. AMP INTERNAL COMPONENTS WITH FAIRING AND FRAME MEMBERS REMOVED

Coarse alignment with the docking station is achieved by the ROV deployment system and will be confirmed by a secondary camera and ranging lasers on its tool skid. As the AMP is lowered into place, the conical shape of the docking station aligns with a matching cone on the securement assembly. To provide rotational alignment (i.e., aligning the wet-mate socket and plug) two adjustable tabs are affixed to the latch and drop into matching slots on the docking station. By changing the position of these tabs, the AMP can be reconfigured to one of the three orientations described above. Once aligned, three mechanical latches clamp the AMP to the docking station. Each latch features an over-center toggle which grips a flange on the docking station. This assembly is actuated by a submersible linear actuator incorporated into the ROV tool skid. The wet-mate connection is then engaged by a second linear actuator, also on the tool skid.

The wet-mate connector that remains on the converter for its entire deployment is the only component of the system that cannot be easily serviced. To minimize the risk of damage to the wet-mate connector, mating and de-mating must only be performed when the AMP is securely connected to the docking station. This ensures the most controlled environment possible for the critical mating operation.

Mechanical Structure The AMP's mechanical structure consists of a streamlined outer hull and modular internal bulkheads. The streamlined shape reduces the thrust requirement to maneuver the package to the docking station and also reduces loads on the securement system in operation [4]. Buoyancy and ballast must be distributed throughout the body of the AMP to achieve the desired stability and wet weight. The use of neutrally-buoyant materials in the AMP structure (e.g., plastics) provides flexibility to achieve the desired distribution. The ability to redistribute internal components without affecting buoyancy is critical to enabling instrument reconfiguration. In addition, autonomous instrumentation deployments at this location have also demonstrated that plastics are more resistant to biofouling than composites. To this end, Delrin and Ultra-High Molecular Weight (UHMW) polyethylene are used wherever possible; only the latching mechanism and strobe support struts require the strength of a metal. The easily configurable bulkheads provide a straightforward method to attach flotation and ballast to trim the system and obtain the desired separation between the centers of buoyancy and mass.

Custom instruments and electronics, such as the optical camera system, are housed in cylindrical watertight bottles. Double radial o-rings provide a redundant seal and mono-filament is used to secure the end caps to the bottles. The filament seal eliminates the risk of corrosion associated with dissimilar metal contact and all end caps are machined from Delrin. Electronics that produce large amounts of heat, such as the strobes and power converters, are housed in anodized aluminum bottles that effectively transfer heat to the surrounding water. The remaining bottles are fabricated from Schedule 80 PVC pipe. Special considerations are made in the bottle design to isolate electronics from metal components and paths to seawater ground. These features should reduce the rate of saltwater corrosion and increase the system endurance.

Adaptability and longevity of the infrastructure are primary design considerations. The AMP form factor allows for alternative instrument configurations as well as a swappable module for docking mechanisms suitable for deployment at both wave and tidal energy sites. Alternative instrumentation configurations are enabled by swappable bulkheads with integrated mounting interfaces. These bulkheads provide structural strength and simplify the securement of instruments.

"Millennium" Falcon Deployment System

AMP deployment costs are minimized by utilizing an inspection-class ROV that can be mobilized by a relatively unspecialized vessel. A balance of cost, performance, and ease of customization lead to the selection of the SAAB SeaEye Falcon ROV for this system. The Falcon is a commercially available inspection-class ROV that weighs 60 kg in air and is 1 m long by 0.6 m wide by 0.5 m tall (www.seaeye.com/falcon.html). With 4 vectored horizontal thrusters and one vertical thruster, the Falcon is capable of developing 50 kg of force in the forward direction and 13 kg of force in the vertical direction. The ROV requires single phase 100-270 VAC and draws up to 2.8 kW of power. Due to the compact size and power requirements, the Falcon may be deployed from vessels of opportunity unable to accommodate larger, work-class ROVs.

Based on hydrodynamic analysis [4], the Falcon ROV lacks the thrust necessary to support deployment of the AMP in anything other than rare, sustained slack water events. To increase the number of windows suitable for maintenance intervention, the Falcon ROV is coupled to a customized tool skid, dubbed the "Millennium". The Millennium tool skid (shown below the AMP in Figure 1) is being developed with subsystems provided by SeaView Systems and is modeled after their "Raptor" modification to the Falcon ROV. This tool skid doubles the thrust of the stock Falcon ROV, while providing 100% redundancy of system propulsion and no interference with stock systems (i.e., disengaging the Falcon from the Millennium skid nearly returns it to factory condition).

The hydrodynamic characteristics of the Falcon and AMP assembly have been evaluated by computational fluid dynamics (CFD) simulation and verified by experimental testing [4]. This analysis suggests a drag coefficient of approximately 0.76 for the AMP and Millennium Falcon during deployment against the dominant current direction. Based on this analysis, the Millennium Falcon must overcome approximately 650 N of drag force in a 1 m/s current during deployment, which is within the capabilities of the 980 N of thrust provided by the system. We note that this is an upper limit for system deployment and, in a tidal energy context, 1 m/s currents would be encountered only on the margins of a deployment operation.

The Millennium tool skid operates in a Master/Slave configuration with the Falcon's surface control unit. Pilot commands are transmitted via a RS485 BUS to all of the vehicle's assemblies such as the thrusters, actuators, camera tilt motor, and lamps. At the heart of the Millennium is SeaView's thruster control board which receives the Falcon commands and emulates them to control the appropriate thrusters on the tool skid. Thrusters on the Millennium are arranged in a mirror configuration to the vectored thrusters on the Falcon, but positioned below the main body of the AMP to lower the center of thrust. The vertical thruster is removed from the center of the Falcon and placed symmetrically with a second vertical thruster on the Millennium tool skid. In this manner, the ten thrusters on the Millennium Falcon operate on the same commands as Falcon alone.

Launch Platform During the initial phase of deployment, the AMP and ROV are mounted to a launch platform on an interface similar to the docking station. Once the surface vessel is on site, the launch platform is lowered to the approximate

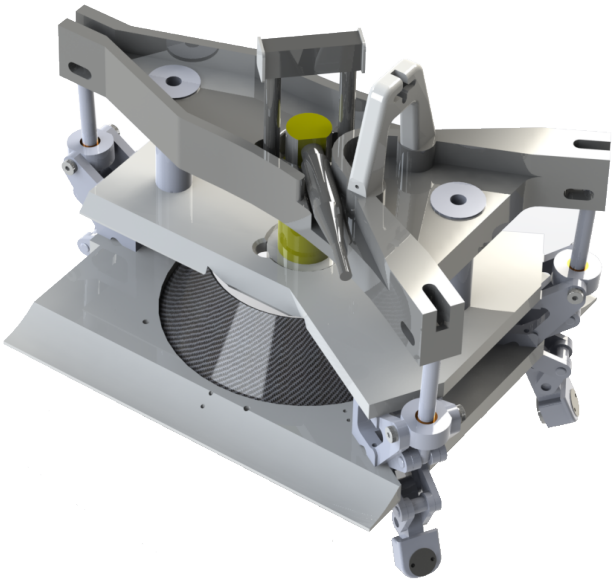

FIGURE 4. AMP SECUREMENT ASSEMBLY WITH ALIGNMENT CONE, THREE OVER-CENTER LATCHES THAT CLAMP TO THE DOCKING STATION AND WET-MATE CONNECTOR INTHE CENTER (ACTUATORS NOT SHOWN)

depth of the docking station and remains on the launch platform until the surface vessel maneuvers it within 100 m of the docking station. This two-stage deployment method serves a number of functions including minimization of the distance traveled by the AMP and ROV during the approach to the docking station.

The umbilical between the surface vessel and launch platform is load-bearing and the platform is relatively heavy, serving to isolate the AMP and ROV from the surface vessel motion and drag caused by currents in the upper portion of the water column. Between the ROV and the launch platform, the umbilical is neutrally buoyant and housed in a basic, passive tether-management-system (TMS) on the launch platform. By lowering the launch platform to the approximate depth of the docking station, the launch platform and TMS limit the length of umbilical that the ROV must tow against the current.

PERFORMANCE EVALUATION

Hydrodynamic Performance

The hydrodynamic performance of the AMP and the Millennium Falcon have been evaluated by simulation, as described in the second part of this paper [4]. CFD simulations have provided guidance for drag minimization (during both deployment and operation), as well as estimates for the center of pressure. Dynamic stability simulations of the system in turbulent, sheared flows are planned to proceed in parallel with prototype system fabrication and testing.

Stability

The stability of the AMP and Millennium Falcon in turbulent currents depends on the balance of forces acting on the system and the location that those forces are imparted. The righting moment created by the vertical offset of the center of mass (C_m) from the center of buoyancy (C_b) will play an important role in minimizing the effect of turbulence. By adding ballast to the bottom and floatation to the top of the AMP, the righting moment may be manipulated to increase passive stability. The current design places C_m 4 cm below C_b. However, the placement of the large recovery float has created a horizontal separation of 18 cm between C_m and C_b. This will be corrected with additional ballast and floatation, as will any un-modeled or unsteady effects identified during field trials.

The center of pressure (C_p) created by the lift and drag forces acting on the complete system during a head-on flow is located approximately 28 cm behind the frontal plane of the AMP and is nearly in line with the central axis. Modest adjustments to the height of the Millennium thrusters will allow the center of thrust (C_t) to be collocated with the center of pressure to reduce pitching moments during thrusting maneuvers. During deployment, the relative locations of C_p and C_t are also crucial for overall system handling. The current AMP design has these points located along the centerline of the body with the C_p roughly 33 cm forward of the C_t. This is largely related to the position of the struts required for the stereo-optical camera system strobes. It remains to be determined whether this will pose a challenge to directional stability in the horizontal plane. When the C_p is ahead of C_t, stability is traded for maneuverability (and is beneficial in some applications). This could, however, be detrimental to stable flight in turbulent currents and an additional fin-like feature toward the aft end of the ROV is being considered to reduce the separation between C_p and C_t.

Test Plan

Prior to deployment in support of marine energy projects, a rigorous testing regimen is needed to thoroughly validate the design and operation of the AMP and the Millennium Falcon. This will begin in April 2014 with a system burn in and tank testing. In May of 2014 operations will move to Lake Washington for field testing in a calm environment. Field tests will also provide an opportunity for ROV operators to practice docking the AMP using the test docking station pictured in Figure 5. Once successful operation has been demonstrated in a calm environment, field testing will progress to salt water locations with wave and current conditions similar to those expected for early adoption projects (e.g., Snohomish PUD tidal energy demonstration site in Admiralty Inlet, WA). In addition to these operational tests, the AMP, with a full complement of instrumentation, will un-

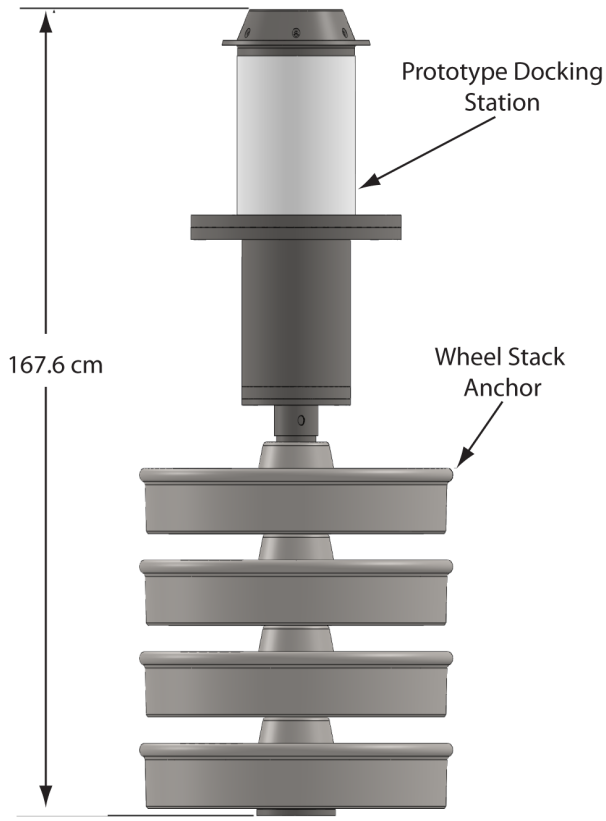

FIGURE 5. PROTOTYPE DOCKING STATION FOR FIELD TESTING OF TURNAROUND OPERATIONS WITH SURPLUS RAILROAD WHEELS AS AN ANCHOR FOR TEMPORARY PLACEMENT ON SEAFLOOR

dergo a 3-6 month endurance test in early 2015 to evaluate complications arising from corrosion or biofouling during extended deployments.

DISCUSSION

The preceding description of the system concept for environmental monitoring around tidal energy converters motivates three further points of discussion.

Wave Energy Environmental Monitoring

Environmental monitoring requirements for wave energy projects are similar to tidal energy, excepting the risk of blade strike, which is specific to tidal [11]. Options for the deployment of monitoring instrumentation in the near-field of wave converters pose additional restrictions absent for most tidal converters. Specifically, given that the power take-off mechanism for a number of wave converters (e.g., point absorbers) depends on the form factor and mass of the converter, docking the AMP directly with the converter may affect power take-off. For wave converters with a surface expression, there are a number of options for instrumentation maintenance and reconfiguration not available for fully submerged tidal converters (e.g., through-hull wet wells, diver intervention, ROV intervention for individual instruments) and a package like the AMP may not be necessary to achieve specific monitoring objectives. For monitoring of wave converter anchors and moorings, as well as situations in which a substantial stand-off distance from a wave converter is beneficial, the AMP is likely to provide an effective monitoring solution. However, in moderate water depth, wave orbital velocities are similar in the horizontal and vertical direction. For near-surface AMP deployments, where wave orbital velocities could exceed 3 m/s in any direction, a redesigned hull with less directional variation in its drag profile may be desirable (e.g., a spherical hull).

Non-Monitoring Applications in Marine Renewables

The “plug and socket” architecture of the AMP is intended to simplify maintenance of monitoring instrumentation. This approach may also be suitable for other elements of marine energy converters and supporting infrastructure. For example, to maintain subsea electrical transformers serving arrays of converters, one could disconnect every cabled connection to the transformer pod, recover the entire pod, and then reverse the operation during redeployment. Such an operation would likely be relatively time-consuming to carry out and presents risks to all pod cables during disconnection, pod redeployment, and reconnection. Alternatively, if the electrical transformer were to be housed within a “plug”, while the cables from individual converters and export cable at a static “socket”, the transformer could be recovered for maintenance in a simplified operation with lower risk. Such an arrangement would, however, require utility-scale wet-mate connectors (e.g., voltage likely exceeding 30 kV) that are not yet commercially available.

Opportunities for Enhancement

The docking procedure will likely be the most challenging aspect of the AMP maintenance routine as it requires precise maneuvering in the presence of uncertain flow conditions. Early implementations will rely on adjustments until an efficient, repeatable process is established. Measures may be taken to enhance properties of the securement assembly and docking station, but navigation and precise maneuvering will remain critical. Enhancements that facilitate precise navigation and maneuvering of the AMP and ROV with respect to the docking station would have considerable impact – enabling regular, rapid maintenance at lower risk.

The fixed docking station, integrated with a marine energy converter, could be used to provide points of reference for automated state estimation and feedback control. Measurements from sonar and ultra-short baseline (USBL) positioning systems

could be utilized to determine position and orientation of the AMP and ROV with respect to the docking station. This information could enable pilot-assisted navigation through the use of haptic feedback. This would be similar to the approach used in [12] where ROV manipulator systems are considered. For the application of AMP deployments, feedback would be relayed to the pilot to guide the system into a configuration for docking. Such an enhancement could be made to the system without significant modifications to existing control systems and has potential to reduce deployment time and avoid errors, while preserving authority of the pilot.

As monitoring studies progress, sensor technologies will improve and some environmental risks may prove to be insignificant. The need for redundancy and the size of instruments will likely decrease. Next-generation monitoring systems are likely to have a smaller profile, reducing the need for power-intensive propulsion and may rely on autonomous, robotic maintenance strategies. Automated navigation and control could allow an autonomous underwater vehicle (AUV) to perform all necessary recovery and deployment operations. The benefits of such an approach would be numerous and could significantly lower the cost of monitoring studies for commercial-scale arrays.

CONCLUSION

The conceptual design and operations plan for the Adaptable Monitoring Package is intended to result in an integrated instrumentation system capable of responding to high-priority environmental and resource monitoring needs around marine energy converters. The cost of maintenance interventions in high-energy environments is reduced by a strategy consisting of an off-the-shelf inspection-class ROV and customized tool skid for deployment and an integrated, autonomous acoustic release system for recovery. Initial hydrodynamic analysis suggests a favorable drag profile and operational stability for deployment at tidal energy sites. This will be confirmed during field testing and any necessary design iterations undertaken ahead of an endurance test. While this initial design is best suited for environmental monitoring at tidal energy sites, the "plug and socket" architecture is applicable to wave converter monitoring and electrical infrastructure maintenance. Enhancements to the autonomy of instrumentation redeployment are likely to further reduce operational risk and overall cost.

ACKNOWLEDGEMENT

The authors wish to acknowledge the financial support of the US Department of Energy under DE-FG36-08GO18179-M001 and non-federal cost match by Public Utility District No. 1 of Snohomish County. The collaborative design effort has relied heavily on input from Paul Gibbs and Trina Litchendorf of the University of Washington Applied Physics Laboratory, Tom Jackson of Jackson Engineering, and Danny Miles of the Public Utility No. 1 of Snohomish County. The authors would also like to acknowledge Geoff and Matt Cook at SeaView Systems for support of the Millennium skid development and Teymour Javaherchi at the University of Washington for assistance in setting up numerical simulations.

DISCLAIMER

This report was prepared as an account of work sponsored by an agency of the United States Government. Neither the United States Government nor any agency thereof, nor any of their employees, makes any warranty, expressed or implied, or assumes any legal liability or responsibility for the accuracy, completeness, or usefulness of any information, apparatus, product, or process disclosed, or represents that its use would not infringe privately owned rights. Reference herein to any specific commercial product, process, or service by trade name, trademark, manufacturer, or otherwise does not necessarily constitute or imply its endorsement, recommendation, or favoring by the United States Government or any agency thereof. Their views and opinions of the authors expressed herein do not necessarily state or reflect those of the United States Government or any agency thereof.

REFERENCES

[1] Polagye, B., Cleve, B. V., Copping, A., and Kirkendall, K., eds., 2011. Environmental effects of tidal energy development, U.S. Department of Commerce, National Oceanic and Atmospheric Administration, National Marine Fisheries Service, NOAA Technical Memorandum NMFS F/SPO-116.

[2] Polagye, B., Copping, A., Suryan, R., Brown-Saracino, J., and Smith, C., 2014. Instrumentation for monitoring around marine renewable energy converters: Workshop final report. Tech. Rep. PNNL-23100, Pacific Northwest National Laboratory, Seattle, WA.

[3] Polagye, B., and Thomson, J., 2013. "Tidal energy resource characterization: methodology and field study in Admiralty Inlet, Puget Sound, WA (USA)". *Proc. IMechE, Part A: J. Power and Energy,* ***DOI: 10.1177/0957650912470081***, March 22.

[4] Joslin, J., Polagye, B., Stewart, A., and Rush, B., 2014. "Development of an Adaptable Monitoring Package for Marine Renewable Energy Projects: Part II – Hydrodynamic Performance". In Proceedings of the Marine Energy Technology Symposium, METS2014.

[5] Barnes, C. R., Best, M. M., Johnson, F. R., and Pirenne, B., 2010. "Final installation and initial operation of the world's first regional cabled ocean observatory (NEPTUNE Canada)". *L'observatoire NEPTUNE du Canada,* ***38***(3).

[6] Cowles, T., Delaney, J., Orcutt, J., and Weller, R., 2010.

"The ocean observatories initiative: sustained ocean observing across a range of spatial scales". *Marine Technology Society Journal,* ***44***(6), pp. 54–64.

[7] Joslin, J., Polagye, B., and Parker-Stetter, S., 2012. "Development of a stereo camera system for monitoring hydrokinetic turbines". In Proceedings of the MTS/IEEE Oceans 2012 Conference, MTS/IEEE.

[8] Wiggins, S. M., McDonald, M. A., and Hildebrand, J. A., 2012. "Beaked whale and dolphin tracking using a multichannel autonomous acoustic recorder". *The Journal of the Acoustical Society of America,* ***131***(156).

[9] Jaffe, J. S., 1988. "Underwater optical imaging: the design of optimal systems". *Oceanography*, November, pp. 40–41.

[10] Joslin, J., and Polagye, B., In Review. "Biofouling mitigation methods for optical ports". *IEEE Journal of Oceanic Engineering*.

[11] Boehlert, G. W., and Gill, A. B., 2010. "Environmental and ecological effects of ocean renewable energy development". *Oceanography,* ***23***(2).

[12] Rydén, F., Stewart, A., and Chizeck, H., 2013. "Advanced telerobotic underwater manipulation using virtual fixtures". In Proceedings of the MTS/IEEE Oceans 2013 Conference, MTS/IEEE.