OFFSHORE WIND FARMS IN THE WESTERN GREAT LAKES:

AN INTERDISCIPLINARY ANALYSIS OF THEIR POTENTIAL

by

John S. Hingtgen

A thesis submitted in partial fulfillment of the requirements for the degree of

Master of Science

(Land Resources)

at the

UNIVERSITY OF WISCONSIN-MADISON

2003

ACKNOWLEDGEMENTS

I would like to thank a number of people who helped me complete this study and my graduate work: My advisor, Dr. Doug Reinemann, and thesis committee members, Doctors Jack Huddleston and Bill Provencher, for their helpful advice, suggestions and guidance; many professionals working in renewable and other energy fields in Europe, Canada and the United States who supplied information and referrals to sources; the Interlibrary Loan Office at the UW-Madison Library System for obtaining key documents from around the U.S.; my parents, Dan and Dorothy, for their support and their example of lifelong study and learning; the various types of folk dance communities in Madison and the Upper Midwest, for enriching the lives of many students and non-students alike over decades; and finally, the citizens of Wisconsin, who supported this research. It is my hope that the results of this study will make a contribution to harmony between society and the environment in Wisconsin and the larger world.

ABSTRACT

This thesis is an interdisciplinary study of the potential of offshore wind farms in the western Great Lakes. It includes an opinion survey of representatives of the public, an analysis of potential offshore sites, an estimate of the potential power and energy available, an extensive review of existing European experience, and the discovery of locally relevant information. The opinion survey found that there was a marked preference among respondents in counties bordering the lakes for onshore wind farms over offshore ones. Opposition to offshore projects is stronger along Lake Superior than Lake Michigan. A map analysis identifies several suitable sites along Lake Superior and many sites along Lake Michigan. The potential electric power of wind farms offshore in the study area with constraints applied is estimated to be approximately 9,700 MW. Available information indicates that most environmental impacts would likely be minimal in this area, with the possible exception of perceived view shed impacts.

TABLE OF CONTENTS

I. INTRODUCTION 1

A. RESEARCH OBJECTIVES & QUESTIONS 3

B. STUDY AREA 4

II. BACKGROUND & LITERATURE REVIEW 5

A. TECHNOLOGY 5

1. Tower foundations 12

2. Suitable conditions for offshore wind farms 22

3. Connection/Transmission to shore 23

B. ENVIRONMENTAL EFFECTS 29

1. Wildlife 30

2. Other environmental effects 38

C. ECONOMICS 41

1. Economic factors 41

2. Economic effect of a wind farm on other property values 49

D. POLICY 51

1. Laws and regulations 51

2. Public opinion 60

E. EXISTING AND PLANNED OFFSHORE PROJECTS 78

III. OPINION SURVEY 82

A. NEED FOR/ IMPORTANCE OF PERCEPTIONS IN SITING 82

B. METHOD 83

1. Selection of respondents and areas to survey 83

2. Formulation of survey questions 86

3. Survey procedures 88

C. RESPONSES 90

1. Common questions- Form B responses 92

2. Interest group only questions -Form I 111

3. Public official only question-Form O 115

D. ANALYSIS OF SURVEY RESULTS 116

1. Geographic differences 118

2. Possible sources of bias 122

IV. ESTIMATION OF POWER AND ENERGY AVAILABLE 124

A. FROM A SINGLE TURBINE 124

B. FROM WIND FARMS 124

V. ONSHORE WIND FARM COMPARISON 128

A. TECHNOLOGY 128

B. ENVIRONMENTAL EFFECTS 129

C. ECONOMICS 132

D. POLICY AND REGULATIONS 137

VI. CONCLUSIONS & DISCUSSION 138

A. CONCLUSIONS 138

B. DISCUSSION 141

C. SUGGESTIONS FOR FUTURE RESEARCH 143

VII. BIBLIOGRAPHY 144

VIII. APPENDICES 151

Cover letter for survey

Survey questionnaires

Both groups (Form B)

Interest groups (Form I)

Public officials (Form O)

Photo and photo simulation sheet of survey package

Survey response data spreadsheets

Both groups (Form B)

Interest groups (Form I)

Public officials (Form O)

Wind energy resources of potentially suitable sites

Maps of favorable sites for wind farms in Lake Superior portion and Lake Michigan portion (In back)

LIST OF FIGURES

Figure 1: Tower Foundation Types 13

Figure 2: Final Design of Ice Cone at Middelgrunden 17

LIST OF TABLES

Table 1: Existing Offshore Wind Farms 80

Table 2: Planned Offshore Farms in North America 81

Copyright 2003, John S. Hingtgen

I. Introduction

Electricity demand within the Upper Midwest is high in the large metropolitan areas with their concentrations of people and commercial and industrial activities: Chicago and northeastern Illinois, Milwaukee and southeastern Wisconsin, Green Bay and the Fox River Valley, and Superior/Duluth. There are also a significant numbers of customers in these urban areas who may be willing to buy green electricity- including that generated by wind power. The City of Chicago, for example, announced that by 2010, it would work "…with four city agencies and 48 suburban governments to purchase 20 percent of their combined power needs from renewable energy sources (Eber 2001)."

The largest onshore wind resource in this region is located away from these urban centers, in the western parts of Iowa, Minnesota, and the Dakotas. The capacity of transmission lines to bring this green energy to customers is limited. If large amounts of wind energy could be generated near population centers, the need for new, long-distance transmission lines would be reduced while still allowing customers in the major markets to use wind-generated electricity.

There are, however, large wind resources near these use centers that have not been tapped. These are the offshore winds of the lakes, which are close to many of the cities. Historically, it was the assets of the lakes that induced the first settlers to build their cities near them, for trade, for the climate, and for the water that could be used in industry. The

proximity of the cities to the lakes presents the opportunity to use the winds blowing over them to generate power in a modern way.

Potentially confounding development of wind resources offshore of these cities, however, is a pattern of use of the shorelines for recreational, resort and vacation uses over many years. Such uses have depended on the natural and undeveloped state of the lakeshores. Where power plants exist, they are separated by largely undeveloped shorelines in many areas. People who live along and use the shores have not always had to see the power plants that provide the electricity they use. Now with the option to site wind farms offshore comes the possibility that power plants could take on a much higher profile in the public's awareness. Although the technology and economic factors are coming together to facilitate offshore wind farms in the Great Lakes, public awareness of power generation in the region is still at a fairly low level.

The first wind farms in the United States were built in California over two decades ago. They were poorly sited in many cases both aesthetically and regarding impacts to wildlife. Much of the public's knowledge of wind generation is based on old information derived from those early wind farms. In the intervening years, wind technology and siting have evolved far. Wind farms being built today are much more efficient, more cost-effective, much safer for wildlife, and much more carefully sited than early ones. Nevertheless, the burden of proof in siting new farms is usually on the project developers, who are often faced with counteracting outdated conceptions of how wind farms are and function.

This thesis investigates offshore wind generation in four aspects: economic, environmental effects, policy (including laws and opinions of the public), and technology. Comparisons are made to onshore wind generation and electric power generation. Very little information on offshore wind for the United States has been published yet, especially regarding the economic, environmental effects, and policy/social aspects. Therefore, an extensive review of the experiences of offshore wind generation in Europe is included. As a part of the examination of the technology, it also includes an estimate of the potential wind energy resource within the study area.

A. Research objectives & questions

To gain an understanding of the potential for offshore wind energy, and especially the opinions and viewpoints that would affect permitting and siting of offshore wind farms, several questions were addressed.

- Where are the physical conditions favorable for offshore farms? What are some reasonable criteria to use in identifying physically favorable sites? What are some reasonable thresholds for screening?
- Would the public in the lakeshore areas favor offshore or onshore wind farms? What are their related views regarding wind energy use, both from offshore sources and more generally?
- Are there geographic differences in perceptions, e.g. between communities near Lake Michigan and Lake Superior?

- Is there a co-incidence between the preferred area(s) indicated by an opinion survey and the area(s) favored by physical factors?

B. Study area

The area for this study is the southern shore of Lake Superior and the western and northern shore of Lake Michigan, including Green Bay. This area could be tapped to generate green power near the demand centers. This study is limited to large (utility scale) offshore turbines that are mounted on foundations on the bottom of water bodies. It does not review concepts for floating designs. Although such ideas have been proposed, none have been built so far anywhere in the world. The engineering challenges would be much greater for a floating turbine. A turbine is normally designed to monitor wind direction and point its rotor into the wind for maximum efficiency. A floating turbine would have to not only compensate for rotation induced by wave movement, it would have to adapt to stresses caused by rotation and pitching of the moving water surface.

II. Background & Literature Review

A. Technology

Wind resources are classified by power, based on wind speeds. The power scale goes from class 1-the lowest-to class 7. As a generality, class 3 and above can be used with utility-scale turbines, and classes 4 and above are considered a good resource (EREN 2002). This generalization depends on the size of turbine, and commercially viable projects in both Wisconsin and Michigan have been built in areas depicted in Class 3 and lower. More detailed mapping at the state level can refine these estimates made for national resource evaluation. Wind speeds and classes of wind power density from (NREL 2003) are:

Wind Power Class*	10 m (33 ft)		50 m (164 ft)	
	Wind Power Density (W/m^2)	Speed [b] m/s (mph)	Wind Power Density (W/m^2)	Speed [b] m/s (mph)
1	0	0	0	
	100	4.4 (9.8)	200	5.6 (12.5)
2				
	150	5.1 (11.5)	300	6.4 (14.3)
3				
	200	5.6 (12.5)	400	7.0 (15.7)
4				
	250	6.0 (13.4)	500	7.5 (16.8)
5				
	300	6.4 (14.3)	600	8.0 (17.9)
6				
	400	7.0 (15.7)	800	8.8 (19.7)
7				
	1000	9.4 (21.1)	2000	11.9 (26.6)

(a) Speeds at 50 m are a vertical extrapolation of wind speed based on the 1/7 power law. [50m is often used to represent a typical turbine hub height.]

(b) Mean wind speed is based on Rayleigh speed distribution of equivalent mean wind power density. Wind speed is for standard sea-level conditions. To maintain the same power density, speed increases by 3%/1000 m, or (5%/5000 ft) elevation.

*NOTE: Each wind power class should span two power densities. For example, Wind Power Class = 3 represents the Wind Power Density range between 150 W/m^2 and 200 W/m^2. The offset cells in the first column attempt to illustrate this concept.

The relationship between wind speed and height over the ground or water surface is described by an equation known as the "Power Law." An exponent represents the steepness of this curve of speed vs. height. This exponent is also known as the coefficient alpha. Its value is different for offshore versus onshore locations. Whereas open grassland sites in Wisconsin have a coefficient of about 0.19, the annual average value over mid Lake Michigan is approximately 0.12 (Owen 1992). He notes that the American Wind Energy Association recommends using a value for alpha of 0.10 over open lakes. (Patel 1999) states that 0.10 is appropriate over lake and ocean terrain. The effect of this difference is that wind speeds increase more quickly with height over water than over land, so a tower can be shorter over water: approximately ¾ the height (Ostergaard 2001).

Wind resources of Wisconsin, Michigan and Illinois, including the near offshore waters, are depicted in (NREL 1986) on-line, and (Elliott and others 1987) in paper form. Within the area of the present study, the wind resource off the eastern side of Wisconsin in Lake Michigan has been rated at class 3 for a distance of approximately 10 to 40 km out from shore and class 4 in a band beyond that, eventually growing to class 5 in mid lake (Elliott and others 1987). The northern shore of Lake Michigan is roughly along the boundary between classes 2 and 3, with the boundary running down the middle of Green Bay and then down the Door Peninsula. Lake breezes increase the wind power, and these are greatest in the spring.

Class 3 resources can be found offshore of the southern shore of Lake Superior along most of the way from Superior to Sault Ste. Marie. Class 4 begins in a band farther

offshore at between 10 and 30 km out. This class band cuts across the Keweenaw Peninsula of the Upper Peninsula of Michigan, and the northwestern tip of the Peninsula is in class 5. The middle of Lake Superior is shown as class 5. Classes vary with season, and the maximum occurs in winter, when class 6 can be attained; the summer minimum is described as more typically class 3. Prevailing wind directions are generally from northwest to southwest.

Average wind speeds for particular locations along the lake shores are known reasonably well, although speeds offshore are known only from incomplete data sets and only for a limited number of points. As an example of a known onshore speed from a location near the lake shore, the 30-year annual average speed at Milwaukee's Mitchell Field is 5.18 m/s at a height of 6.1 m (Owen 1992). The same study estimated an average annual wind speed of 7.02 m/s at a height of 42.7 m for offshore conditions.

Modeling of wind speeds in Wisconsin at 60 m above ground level has been done using monitoring stations on land areas (WI DOA 2003). Estimates for near offshore areas are included, although the reliability of these will not be high until offshore monitoring stations can be placed. These modeled estimates show wind speeds over the bay of Green Bay as at least as high as over surrounding land areas. Actual data on offshore winds in the lakes are quite limited and are available mainly for the spring and summer seasons (Owen 2002). Although the present study does not account for the effects of land shadows on the wind resource, these can be important up to 20 km from shore (DWEA 2002), depending on the smoothness of the land.

Offshore winds have two primary advantages over winds over land. First, winds over water bodies are less turbulent, owing to the smoother surface of a body of water and more homogenous heating and cooling than over a land area. This offshore turbulence at a rotor hub height of 50-70 m can be up to 10%, versus 12-15% onshore. Although water surface roughness depends on the waves (Danish Energy Agency and IEA CADDET 2000), it is generally taken to be a constant for a given estimate of wind speed.

Second, wind speeds are higher by at least 20%, but are estimated at up to 40% higher: 35% from higher average speeds and 5% from lower turbulent airflow over a water surface (Owen 1992). Energy yield can be as much as 70% more than onshore turbines, but because turbines are optimized for economics, actual yield is likely to be up to 50% more (Danish Energy Agency and IEA CADDET 2000). At Vindeby, turbines produce 1.5 times more electricity than an average site inland (Ostergaard 2001), and have a capacity factor of 27% (Olsen and Svenson 1997).

The result of the average annual wind speed, applied over a period of time (usually a year) is a capacity factor for the wind turbine or farm. For an estimated offshore value, a factor of 28% was assumed for offshore Lake Michigan production by (Owen 1992).

(Smith and Hagerman 2001) made an overview examination of offshore potential in the Great Lakes and looked more closely at Lake Erie as a site. They used a capacity factor of 28% in their estimates of energy production potential.

Due to lower turbulence and more critical wake effects from one turbine to another, spacing must be greater offshore: 8-10 rotor diameters, rather than a more typical 4-5 diameters by 8 diameters onshore (Rehfeldt and others 2000).

Offshore wind turbines and farms have been derived from onshore designs, which have been in use for over two decades now. Excellent descriptions of onshore technology can be found in (AWEA 2002) and (DWEA 2002). Up to now, offshore turbines have been adapted through a process referred to as "marinizing," which is to modify an onshore design for the demands of marine conditions. Marinized designs include these characteristics (Rehfeldt and others 2000):

- Increased rotor speeds are allowable because noise impacts will not be as critical offshore. Higher speeds allow greater aerodynamic efficiency, lower torques and reduced size of components.
- Greater use of variable speed designs and less aerodynamic loss. Greater control over damaging resonance within the structure.
- Opportunity to use two-bladed rather than the current standard three-bladed designs for lower capital cost
- Movement of the turbine's step-up transformer location from a pad outside the tower used in onshore designs to within the tower or into the nacelle
- Inclusion of built-in hoists, including some that can raise parts for a larger service crane

- Protection against corrosion from humidity, water and icing with coatings for exposed components as well as components within the nacelle. Sealed environments to protect electrical and mechanical equipment have engendered designs with controlled atmospheres. Some evidence, however, suggests that the required level of control of air inside the nacelles is not as high as had been expected.
- Means to supply emergency power for turbine parking, such as through on-site generators in case outside power supplies are lost

Currently, engineers are developing new designs for offshore use starting from the beginning of the design process. Simply marinizing a design developed for onshore use will not allow the optimum design for offshore use (Jamieson and Quarton 1999). The lower turbulence over water compared to over land allows turbines to last longer or be designed for less strength to achieve the same output, and this change in design can lead to lower capital costs.

The trend is to design larger capacity turbines for offshore use. In 1999, a 2.5 MW unit and a concept for a 5 MW gear/generator were presented in Germany, (Danish Energy Agency and IEA CADDET 2000). Future machines are likely to have capacities of 3-5 MW (Rehfeldt and others 2000). Such larger designs would take advantage of economies of scale in siting, installation, and maintenance. Numbers of turbines per farm are also expected to be larger at around 100 turbines.

Other design changes that can be expected with optimized offshore machines include these (Jamieson and Quarton 1999).

- Increase in tip speeds to 65 to 70 m/s to reduce torque and mass
- Greater use of variable speed rotation to control resonant vibrations

1. Tower foundations

Turbine towers are placed on foundations in one of three types of designs: a mono-pile driven into the seabed, a gravity foundation of steel, concrete, and ballast, or a tripod foundation. The three types of foundations are depicted in (Feld and others) and are shown below. Foundations depicted are concrete gravity, steel monopile, and steel tripod.

Figure 1: Tower Foundation Types

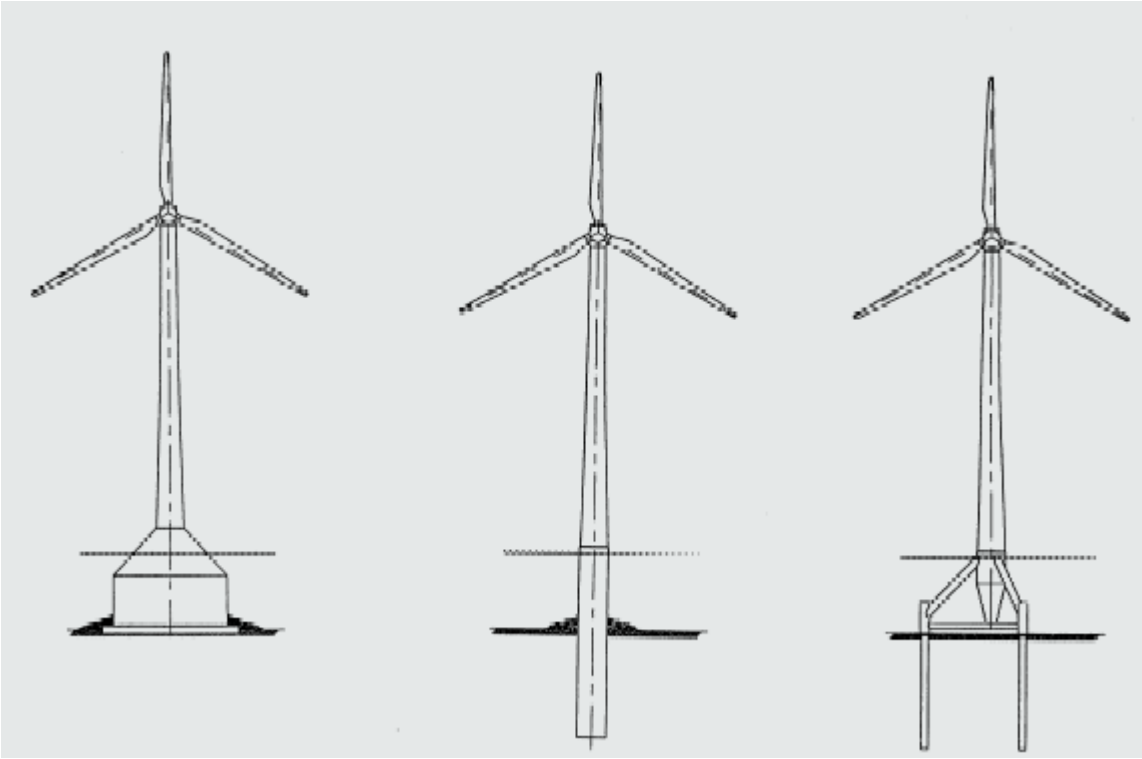

Gravity foundations can be made of concrete and/or steel, or designed as a caisson, which is ballasted when installed. A 1.5 MW turbine would typically have a ballasted caisson weight of 1,500 tonnes. The upper sides can be sloped to a conical shape, which has been found to reduce the loading from ice on the foundation. It is thought to be commercially useful in water up to 10 m deep, but to be physically unusable above 20 m (Rehfeldt and others 2000). The gravity foundation has the advantages of:

- Can be constructed onshore
- Suitable when the lake bed has large stones

The disadvantages include:

- Lake bed must be prepared
- Toe must be protected against scour, which can be difficult where there is a large amount of sediment transport at the lakebed level.

A monopile is said to be useful in water depths up to 25 m deep, although other sources places its limit at 30 m (Kuhn and others 1999). Advantages of the mono-pile type are:

- Quick installation
- Piles are simple to make
- Little preparation needed in lake bottom
- Low sensitivity to underwater erosion

Disadvantages are:

- Where there are large rocks, driving the monopile is more difficult
- Difficult to modify for ice-protection

The tripod foundation evolved from structures used in the offshore oil industry. Tripods are well suited for water over 7 m deep and can be used in very deep water (Danish Energy Agency and IEA CADDET 2000). A tripod is attached to the bed of the water body by driving piles through the three corner tubes, and then grouting with

concrete. These piles are smaller than the mono-pile design. Tripods are very difficult to install where the bed has large stones. Tripods can be made onshore.

In designing turbines to withstand offshore conditions, engineers design for a certain recurrence interval of natural phenomena and stressors. These intervals range from very short period, such as the period of a wave, to very long period, say 50 years interval, which is longer than the expected lifetime of a turbine. Onshore turbines are typically expected to last 20 to 30 years, with the possibility of a major overhaul midway to later in their life to extend the life for another interval, which may be as long as the original expected lifetime. As a failure is unlikely to affect human safety in most cases, the safety design standards may often be reduced over a structure that is located near people (Danish Energy Agency and IEA CADDET 2000).

a) Ice and foundations

One of the most important considerations in designing offshore towers and their foundations is the force from ice in the winter. Ice can pile up against tower bases up to 10 m (Holttinen and others 1999). Ice loads can be from fast ice or drifting ice floes. Very little work has been done on understanding ice loading, with all the available information coming from studies in Europe, principally the Scandinavian countries.

A study of ice conditions in interior waters of Denmark indicates ice can reach a thickness of 0.42 m on a 10 year recurrence interval and 0.57 m on a 50-year interval (Danish Energy Agency 2001).

Two ways to stop the movement of ice floes and thereby reduce ice loads include "…firm barriers to anchor the ice floe, or to promote rubble formation… (Holttinen and others 1999)" Further details on floe barriers are given in this source. Natural anchors can be islands, reefs or skerries (Haapanen and others 1997). They note that large ice floes in the Gulf of Bothnia can move at speeds up to 1.3% of the wind speed. Ice floes there can be 30 x 30 km in size.

Modified foundation shapes have been used to break up ice and reduce loading on the structure. An ice cone can reduce the ice load by up to 5 to 10 times (Watson 2000). He notes that design values for ice at Middelgrunden farm outside Copenhagen were set at the following values:

- Ice thickness: 0.6 m
- Floe size: 2 x 2 km
- Ice speed: 1.0 m/sec.

Ice cones can slope either outward going upward, as might be used for a monopile, or inward going upward, as a gravity foundation may have (Holttinen and others 1999). Forces on the foundation due to ice can be either upward or downward, depending upon the direction of sloping. Upward forces exert a lifting force on the foundation, and this can be on the order of 1 MN (Holttinen and others 1999), and lateral loads from moving floes can reach 10 MN. Details of how ice cones work are given in (Haapanen and others 1997).

A drawing of the final cone design from Middelgrunden is shown below (Middelgrunden Wind Turbine Co-operative).

Figure 2: Final Design of Ice Cone at Middelgrunden

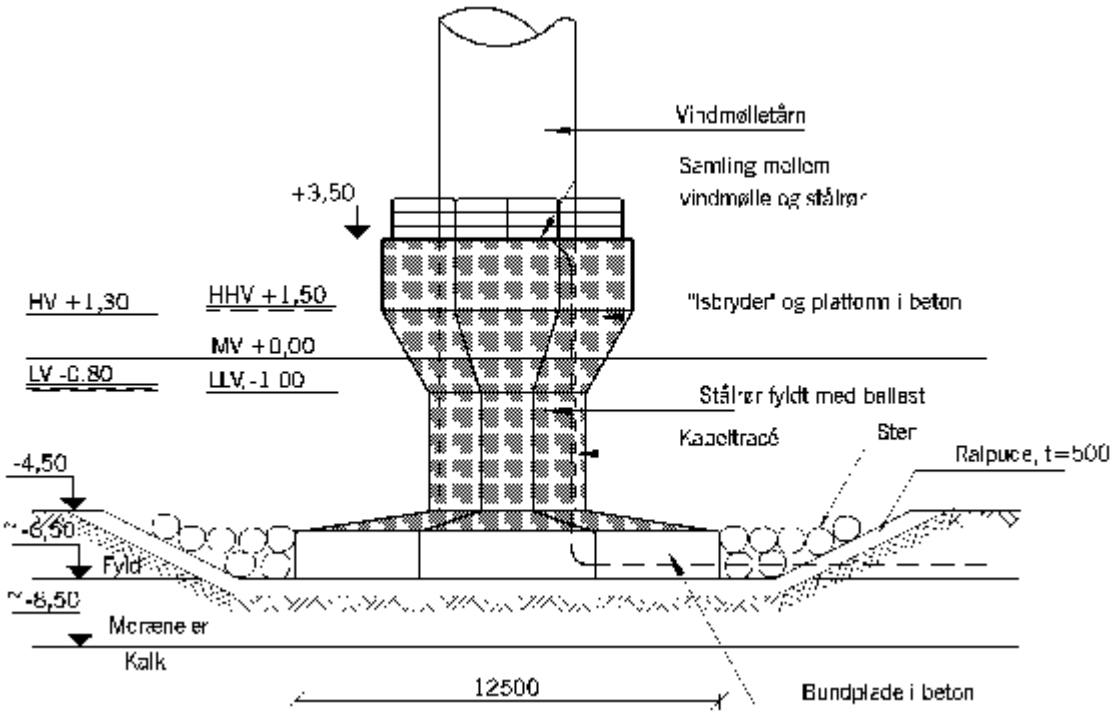

(Holttinen and others 1999) examined offshore wind farm design in the Gulf of Bothnia between Sweden and Finland. This area is frozen between 4-6 months of the year, and normal ice thicknesses are 0.5-0.7 m. They found that thicknesses up to 0.8 m of ice occurred beyond the landfast zone near shore. Within this zone, ice action against foundations is limited by the anchoring effect of "…shoreline, rocks, shallows, islands, and sometimes due to pressure ridges." Ice breaking against structures is the largest load turbine foundations will experience in this area. They found "…with increasing size of the

wind turbine the relative increase in the foundation cost due to ice action is diminishing." They recommend that a 1.5 MW turbine be sited where moving [as opposed to fast] ice is less than or equal to 0.4 m and to incorporate ice cones to reduce ice loads to about 1 MN. Within the landfast zone, thicknesses up to 1.3 m have been observed (Haapanen and others 1997). They recommend siting farms in the landfast zone in order to take advantage of natural or manmade objects that retard ice floes. This zone is 3-5 km wide in the Gulf of Bothnia. Beyond this zone, compression of ice can lead to pressure ridges, both above and below the water surface.

The Great Lakes and their winter ice have been studied extensively from a climatological perspective, although no research has yet identified the implications of this for offshore wind farms. Maximum winter ice coverages over a 34-winter period for the lakes within the study area follow (Rodionov and others 2001). Lake Erie is also included, as it is has been suggested that it would be a favorable site for offshore farms.

	All five lakes	Superior	Michigan	Erie
Mean (%)	58	69	39	87
Median (%)	59	81	32	95
Standard deviation (%)	20	27	23	21

Lake Superior is exposed to the coldest air of the five lakes (Assel and others 1996).

> "Ice can form in shallows in late November or early December…ice cover is usually confined to bays, harbors, and coastal areas through the end of January. During the first half of February, ice covers all of the western basin from Duluth to the Keweenaw Peninsula…and ice forms along the perimeter of the eastern basin 20-40 km away from the shores of the Keweenaw Peninsula to Michipicoten. The normal maximum ice cover…occurs during the second half of February. Ice

> formation can continue through the end of March, although loss of ice cover due to moderating weather also usually starts in March. During the last half of April, the remaining ice is confined to bays, harbors, and havens for wind-driven ice. This lake is usually ice free by early to mid-May."

In Lake Michigan, the situation is similar but has its own characteristics. Great differences in ice conditions occur "…due to its long north-south axis that spans 4 degrees of latitude…. Ice formation on this lake begins in the coastal areas of the northeastern basin and Green Bay during the second half of December. Coastal ice formation migrates southward the first half of January." "The normal maximum extent of ice cover…is attained by the second half of February…"

> "...during the first half of March, marking the beginning of the ice decay period…ice formation continues in the northern midlake areas until the end of March. The ice edge retreats northward as the month progresses, leaving higher ice concentrations in Green Bay and in the lake region between Beaver Island and the Straits of Mackinac. Ice lingers on this lake until the end of April."

In Lake Erie, the normal maximum ice cover occurs in February, and Assel and others (1996) note that "…this is the only Great Lake where the normal seasonal maximum extent lasts an entire month." Maps of the ice coverage for biweekly periods during the winter can be found in (Assel and others 1983). Haapanen and others (1997) note that ice strength and ductility vary with the season.

Ice thicknesses for stations along the western shore of Lake Michigan are not available, but data for stations along southern Lake Superior are shown below (Assel and others 1983).

Station name	Thickness (m) during yr. of minimum ice accretion	Thickness (m) during yr. of maximum ice accretion
Duluth	0.56	0.84
Chequamegon Bay	0.53	0.99
Lanse Bay	0.25	0.61
South Bay	0.43	0.68
Tahquamenon Bay	0.25	0.76
Point Iroquois	0.28	0.73

The southern part of Lake Michigan freezes over about once every 30 years, but in many years, no ice is present outside harbors and bays (Owen 1992). By comparison, "In the Western Baltic Sea, icing occurs about every third or fourth winter. In severe winters there, ice is comparable to Lake Michigan."

The most severe winters in the five-lake region occur on Lakes Erie and Huron, according to (Owen 2002). He states that within Lake Michigan, the northern end ices up much more than the southern and that moving ice is a far greater threat to foundations than stationary ice. One advantage of siting on the western side of lake Michigan versus the eastern side would be that because winter winds tend to be from the west or northwest, the speed of ice floes hitting foundations would be lower on the western side of the lake. As an alternative to stronger foundations, he points out that a foundation need not be designed to survive the maximum icing event. Instead, an icebreaker could be retained on standby to break up ice in a very severe winter before it reaches tower foundations.

In addition, wave and current loads are also factors in designing foundations, as well as the load applied by the wind on the rotor. Wave heights up to over 4 m can be

expected in shallow waters of Lake Michigan (Owen 1992). These types of loads must all be analyzed in designing a foundation.

As an example of loading, (Holttinen and others 1999) note that at 15 m/sec. wind speed, load from the wind in a 1.5 MW turbine can be 2 MN, and wave loading can be 0.5 MN. The particulars of the site determine which of the types of loads is greatest at a given site. Engineers must also control vibrations in the total structure and avoid frequencies that are one of the resonant frequencies. Innovative designs such as vibration isolation sections have been proven to aid in controlling vibration in towers for offshore lighthouses (Haapanen and others 1997).

Risk from the collision of a ship is also typically considered in planning an offshore wind farm. The maintenance platform at the tower base can be designed to deform plastically and absorb the force of a ship's impact (Danish Energy Agency and IEA CADDET 2000).

Normally the base of the tower is fitted with a landing platform for maintenance boats and sometimes a crane to hoist equipment. Newer turbines, such as at Horns Rev in Denmark, have an access platform on the top of the turbine nacelle. Persons can be lowered from a helicopter to the platform and then enter the nacelle for maintenance work. Such an arrangement is useful when water conditions are too rough to allow safe docking of a boat. A hoist can be installed in the nacelle to allow equipment to be lifted from a boat, but for heavier maintenance, a ship-based crane may be needed. One 2 MW model has an 8.5 t gantry crane built in (Rehfeldt and others 2000).

Modern wind farms have remote monitoring, diagnosis and control functions built in to reduce the need for onsite staffing. One farm offshore in Denmark is controlled by personnel at a non-wind power plant at the nearest land.

Other features built in to offshore farms have included the following (Danish Energy Agency and IEA CADDET 2000).

- Automatic greasing system
- Lift cage for work on blades and the tower coating
- Coatings similar to those used for offshore oil structures to protect from weather and water
- Oil-tight towers, platforms and nacelles to prevent oil pollution
- Buoys, beacons and fog-detection system to prevent ship accidents

Because of the harsher environment offshore and the difficulties in getting to offshore turbines when they need service, the availability, or uptime percentage is an important indicator. Barthelmie and Pryor (2001) cites availabilities of 95-97% as having been achieved at two existing farms in Denmark and Holland. Availability is partly a function of funds invested in O & M. Economic optimization by (Kuhn and others 1999) showed that it is better to invest heavily in O & M to achieve high availability, which brings the cost of produced energy down.

2. Suitable conditions for offshore wind farms

Current technology allows sites of up to 30 m water depth to be considered (BWEA 2001) and (Patel 1999), and sites at least 5 km out from shore are recommended (BWEA 2001), and (CAOWEE 2001b). (McGowan and Connors 2000) report on a European study which assumed the depth limit was 40 m, but notes another European study concluding that the present cost of foundations makes a 20 m depth the limit.

In the North Sea of Europe, it is expected that the near future will see farms placed in water 40-50 m deep (Rehfeldt and others 2000). Siting farms farther offshore will tend to reduce visual impacts. Although the first offshore farms are closer to shore, future farms are expected to be larger, so the potential for visual impact will be larger. In addition, winds are expected stronger when moving out away from the influence of the topography on the land, which tends to slow average wind speeds. Wind shade effects from land can operate over a distance of 20 km from shore (Ostergaard 2001). Other physical considerations in siting include the location of underwater cables and pipelines, and parks or designated conservation areas.

3. Connection/Transmission to shore

Existing wind turbines used onshore usually have a machine voltage of 690 V or less (PB Power 2001), which places them in what is considered low voltage. However, offshore turbines in the expected range of 1.5 to 4 MW may operate at higher voltages of 3.3, 6.6, or 11 kV, which means they are "…subject to more stringent, 'high voltage' regulations." Most onshore generators are of the induction type, but these require reactive power from the grid (PB Power 2001). For this and other technical reasons, offshore

generators may employ synchronous generators. Those are, however, more complicated and are expected to require more maintenance.

Power is collected from each turbine within a farm using either a ringed network or a radial network (Rehfeldt and others 2000). The ringed network involves connecting each turbine's output to the next turbine's in a loop, so that power can flow out to the central point through a path in either direction around the ring. In a loop design, radial lines run to clusters of turbines of 30-40 MW each, and terminate at a central point, such as the offshore step-up transformer.

(Jamieson and Quarton 1999) refer to work concluding that for small arrays of turbines close to shore, the best option is splitting the turbines into groups of 30-35 MW each, with a separate connection to shore at medium voltage and no offshore substation. Larger, farther-out farms require substations offshore.

Existing voltages for collecting power within wind farms typically are 24-36 kVAC. Intrafarm voltage at Horns Rev (the largest offshore farm) is 36 kV. A cable capable of transmitting power onshore at this voltage could typically handle only up to about 30 MW. For higher power levels, a step-up transformer would be used offshore, such as was built at Horns Rev. The voltage is boosted offshore to approximately 150 kV, and the cable can carry up to about 200 MW.

High voltage cable capacities from the above source are listed below.

	AC	DC
Maximum voltage (kV), depending on insulation type	400-500	150-600
Maximum power	1200-1500 MVA	500-2400 MW
Maximum length (km)	60-100	80-Unlimited

High voltage AC electricity is normally transmitted in three electrical phases. In a cable, conductors for the three phases are bundled together into one cable when possible (Wright and others 2002). Cables may be armored to protect against objects being moving across the lakebed, but if they are buried below the surface, armoring may not be necessary. Cables may be laid on the bottom where currents are low and there is little risk of damage from anchors or fishing gear. Cables can be buried where needed by washing in or jet trenching (Rehfeldt and others 2000). Bottom disturbance from anchors is rarely more than 1 m deep, fishing disturbance goes down to 0.30 m, and mobile sand waves can disturb the bottom 2-3 m deep (Manwell and others 2002).

Non-wind-farm underwater cables within the study area include an existing 3 km long cable in Lake Superior between Madeline Island and the mainland at Bayfield, and a 5 km cable between Washington Island and the end of the Door Peninsula (Owen 1992). Both cables are reported to have performed well.

So far, offshore wind transmission has used only AC current (Wright and others 2002) . For AC cables over approximately 10 km, the high capacitance of the cable must be taken into account by using reactive power compensation.

With longer cable runs, there is a distance cutoff at which high voltage DC (HVDC) transmission may become more economical, but this depends on the voltage as

well. Transmission of power as direct current involves higher fixed costs (in the form of power converters at the line ends), but lower variable (cable) costs as compared to alternating current transmission. Currently, AC is more economical for voltages under 175 kV, and the distance cutoff is at approximately 30-250 km, although cost reductions in the future are expected so that DC would be as cheap as AC by 2011 (Wright and others 2002). AC transmission is reported to decrease in efficiency beyond 200 MW and 50-100 km. Based on existing offshore wind farm voltages in Europe, it is unlikely that initial offshore farms within the study area would transmit at voltages greater than 175 kV. HVDC can also be preferable where the following conditions exist (Kirby and others 2002).

- Onshore tie in is at a weak point in the AC network
- The number of cables allowable is limited
- A suitable onshore AC connection is some distance from landfall
- The AC network is unstable and HVDC control can be used to stabilize the network

Examples of submarine transmission for wind farms in Europe are as follows (Wright and others 2002).

Site	MW	KV	Length (km)
Blyth	4	11	1.9
Middelgrunden	40	30	3
Horns Rev (estimate)	150	150	18-20

Offshore wind farms of 100 MW or greater will require connecting onshore at points of 220 or even 400 kV, in order to have enough capacity (Rehfeldt and others 2000). Usually, such voltage levels are only available near existing large power plants on the coast. The availability of free capacity on these lines must be confirmed with calculations of load flow (Rehfeldt and others 2000). Retiring of older power plants present an opportunity to use the existing high-voltage lines for new wind generation.

Some of the issues regarding transmission that may arise with offshore projects in the United States include these (Wright and others 2002).

- No U.S. manufacturer of medium and high voltage submarine cables
- Shortage "…of domestic equipment and experience in large-scale submarine cable laying."

(PB Power 2001) estimates that most offshore farms in the United Kingdom will be connected at 132 kV or greater. For farms with capacities of 50 MW or greater in the U.K., regulations governing the power grid onshore may require installing reactive power compensation at the connection point. In addition, frequency control requirements of the grid will be harder to meet and may lead wind farm operators to "…purchase frequency response capability from other generators on the system."

In one view, the goal of power quality control should be to improve quality to the level "…that the only limit for the wind turbine installation is the transmission capacity of the grid. If we do this, we have achieved exactly the same situation as when regular

electricity units are installed (Thiringer 2000)." However, where the electronics of a wind farm can achieve a high degree of control of power quality and the power factor, it has been suggested by manufacturers that the so-called "ancillary services" of providing power that compensates for unbalances on the grid itself may have a value on the power market.

Within offshore farms, 33-36 kV is the highest voltage now normally used (Ackerman 2002). 20 kV has been used for transmission over a distance of 8 km to shore and with a capacity of only 10 MW. The large Horns Rev project, at 15 km from shore, is the only offshore farm where the voltage is stepped up with an offshore transformer. There, it is raised from 36 kV to 150 kV for transmission to shore. For future farms over 250 MW, Ackerman predicts that voltage will be raised to 200-400 kV offshore for transmission to land. For future extensive offshore development, an offshore electric grid has been considered for several areas, including the United Kingdom, Scandinavia, and France. This is expected to be based on HVDC technology.

Once the submarine cable reaches shore, it must be connected at a voltage suitable for the amount of power added to the onshore grid. As there are no U.S. offshore projects yet, it is not known what tie-in voltage would be used. At the planned offshore project south of Long Island, NY, a single-cable transmission line to shore is being considered due to the high reliability of cable (KeySpan Engineering Services 2002). The current plan calls for interconnection on shore at 138 kV, and this is thought to be capable of handling up to 150 MVA of power.

A diagram of the electric grid including the study area with transmission lines of 115 kV and higher can be found in (MAPP 2001). This indicates that tie-in points for power at this voltage along Lake Superior are physically available at half a dozen or more points. Allocation of capacity of the lines is also required in order to use this physical capacity.

The transmission network in the eastern side of the Upper Peninsula of Michigan and the eastern side of Wisconsin is shown in (ATC 2002). Near Sault Ste. Marie and along the southern side of the eastern UP are a number of points where 69 kV and higher lines are available. Farther south, along Green Bay and the Door Peninsula are many locations where 69 kV and higher lines exist, with up to 345 kV lines existing at locations of conventional generating plants south of the Door Peninsula.

(Owen 2002) indicates that the electric grid along the south shore of Lake Superior and from there to large demand centers is not currently capable of handling significant power transfers from offshore wind farms. As an example, the Upper Peninsula of Michigan grid cannot transfer all the power currently available from the fossil fueled generating station at Marquette.

B. Environmental effects

Although impacts from offshore wind farms can potentially be significant in some areas, one should keep in mind a point of comparison. Other offshore structures required to produce energy are known to cause significant environmental impacts in many areas. These structures include platforms for oil and gas drilling, as well as oil and gas pipelines.

Impacts include pollution from oil and gas spills or leaks, as well as disturbance of migrating birds (Rehfeldt and others 2000). In some areas, pipelines cross through designated conservation areas.

Construction impacts at wind farms are generally expected to be temporary, while impacts from an operating farm can be considered permanent. There can also be impacts from dismantling of equipment at the end of the useful life, although no offshore farm is yet old enough to provide any data on such impacts.

The most important potential environmental impact from offshore wind farms is to birds, followed by the potential visual impact (Danish Energy Agency and IEA CADDET 2000).

1. Wildlife

a) Birds

In general, three types of impacts to birds can occur from wind farms (CAOWEE 2001c). Parkinson and IECS (1999) notes that disturbance [displacement] is highest during construction.

- Collision of migrating or feeding birds with turbines or towers
- Displacement of birds from their feeding or roosting grounds
- Turbines' acting as a barrier between feeding and roosting grounds or in migration routes

During operation, bird flocks often see and avoid offshore wind turbines at a distance. At Utgrunden, Eider ducks respond to turbines from 3-4 km away and fly at least 1 km from them as they pass by (CAOWEE 2001c). The report lists several points regarding birds and offshore wind farms.

- Migrating birds in larger numbers often fly at higher altitudes, thereby encountering offshore farms less often. However, birds migrating offshore fly at lower altitudes than when flying over land.
- During poor visibility, such as fog, collision risk increases.
- Birds usually migrate at higher altitudes at night than in the day, leading to lower collision risk if the height is above turbine rotors. However, in general, collision risk is higher at night due to lower visibility.
- Birds migrating over water often fly close to shore, so a near-shore farm would present a greater risk than one farther out.

It notes that birds tend to avoid flying between turbines, so a long line of turbines perpendicular to a migration route can present a barrier to movement. Also, noise from maintenance craft may have more of an impact than that from the turbines themselves.

At Tunø Knob, the most comprehensive study, wintering sea ducks comprising Eider ducks and Common scoters were studied. "No significant disturbance was attributable to the wind farm (Meteoc Plc. 2000)." Change in numbers and distribution reflected variation in the food supply. Bird numbers in the area were higher after

construction of the farm. Eiders "…avoided flying and landing within 100 m of turbines, but this had no impact on their feeding distribution. No significant effect was apparent for common scoter either, though the results were not so conclusive…" Radar studies of flight patterns showed that eiders and scoters flew through the area at night, but flew less within 1500 m of turbines, thus supporting the conclusion they maintain greater distances in poorer visibility. Eiders avoided flying between turbines spaced less than 200 m apart.

At Lely, two species of diving ducks were studied (Meteoc Plc. 2000). The ducks adjusted their flight according to the light levels and flew around the turbines, even in darkness. Most flew around the row of turbines, rather than between them. "It was concluded that during these nocturnal flights 'diving ducks either see or are otherwise aware of the turbines'." A study of a single Swedish turbine had shown that more birds flew farther than 500 m away from the turbine than flew closer to it.

At Blyth, mortality from collision was much lower than background mortality. During construction, some species were displaced, but otherwise, there was no evidence of significant disturbance. In other coastal wind farms, collision rates have been low or negligible and below the level that could cause significant population effects (Meteoc Plc. 2000). However, he points out that even a small additional mortality can be significant if a species is in decline. Disturbances have been recorded up to 800 m from coastal wind farms, but there has been no evidence of major adverse effects. He notes a Dutch study that found birds flying below 100 m in coastal migration and most flying within 700 m of shore.

As with collision risk, the ecological consequences of a disturbance should also be considered. Caution should be exercised where farms are close to breeding colonies. Sensitive areas for birds "…include seabird breeding colonies, seabird concentrations outside the breeding season, and estuarine waterfowl flight routes." Protected areas for the conservation of nature should also be avoided where there is a possibility of an adverse effect (Percival 2001).

Impacts to migrating birds have been a problem only where large numbers move though wind farms with large numbers of turbines, or where a small additional mortality could be significant (Meteoc Plc. 2000). Land birds move over the sea on a broad front and so would not pass through an offshore farm in high numbers as long as farms are 1 km or more from the shore. Coastal bird movements could, however, be more important. He states research has shown that land birds do not move in narrow routes in migrating, contrary to earlier misconceptions. That said, there are concentrations of birds at locations onshore and within 700 m of the shore. Concentrations do not occur offshore in general. English conservation groups have concluded that as long as farms are 1 km or more from shore, there should not be a problem of collisions with migrating birds. (Rehfeldt and others 2000) recommend that the best arrangement at a farm should be "…dense clusters with gaps between them…"

All disturbances do not have an equal significance; disturbance has an adverse effect if it reduces resource use by birds. In coastal areas (Percival 2001) notes that although some studies have found some disturbance from wind farms, many found no

effect. Those finding the largest effects were those with confounding factors, like habitat differences or increased disturbance by people. Therefore, the effect of the wind farm alone could not be separated out. "'The bulk of the evidence at present is that they do not have any major adverse impact.'" Disturbance distances reported were at 1 to 800 m from turbines.

He notes that a study of coastal farm in Holland found a rate of 1.9 to 4.6 collisions/turbine/year, but that this rate was not significant. A study at Blyth Harbor (on the coast rather than offshore) reported 1.3 collisions/turbine/year. Parkinson and IECS (1999) notes that at this rate, wind farms cause fewer bird deaths than traffic and power lines. Percival (2001) concludes that the overall risk of collision with migrating birds with offshore turbines should be low or negligible, especially if sited several km offshore, and the farther out they are, the lower the risk of collisions.

He noted that a study at Tunø Knob recommended that where ducks feed on shellfish, farms should be placed in deeper water, as ducks are less likely to feed where they must dive deeper for food. He reports that research on bird behavior concluded birds are least affected by flashing white lights of low intensity, rather than continuous red or rotating lights. Further, light colors on the equipment should be more visible to ducks than darker colors.

An indication of bird nesting and migration concentrations in the study area can be found in (Scharf and others 1979), and this source was reviewed in evaluating potential offshore farm locations. In the Great Lakes, gulls and cormorants, ducks, geese, terns, and

other waterfowl may be affected by turbines (Ugoretz 2002), (Trick 2002). In the Racine area, there are diving ducks, similar to the Scoters studied in Denmark, as well as Mergansers. No one has enough information to know how much these birds would be affected by offshore wind farms. (Lewis 2002) notes that when birds migrate, they do so in broad fronts. In a review by (Kerlinger and Curry 2002) of bird risks for a proposed project off of Long Island, they concluded that the risk to most species of birds is low.

Regarding Lake Michigan impacts, (Owen 1992) discussed environmental issues with the public in Racine. He found some concern about "…migrating diving ducks and other waterfowl which feed and rest in the Racine Reef Area during spring and fall migration."

b) Other wildlife

Foundations of towers lead to better habitat for fish feeding and an increase in fish numbers according to (Nielsen 2002). A study at the Nogersund farm found no negative impact on fish, and fish numbers increased within 400 m of turbines. However, fewer fish were caught when the turbines were operating (CAOWEE 2001c). Early information suggested that tower foundations were like natural reefs and provided good fish habitat.

(Meteoc Plc. 2000) states that offshore farms can lead to increased fish and shellfish availability and in marine diversity. Foundations act as reefs, and there is often less fishing within the farms. At Vindeby, it was concluded that foundations led to increases in fish stocks. As fish and other organisms that are food for birds are affected, this can also affect bird populations. However, this depends upon whether the fish species

needs a an artificial reef substratum to successfully reproduce (Parkinson and IECS 1999). Cod and herring in the North Sea do not need such a substratum, so their numbers may not increase.

(Ugoretz 2002) notes that the extent of fish-habitat improvement from foundations will depend upon colonization by the exotic Zebra Mussel, which is a significant invasive shellfish in the lakes. These mussels can colonize and monopolize any new substrate constructed. However, they are limited by depth, so in deeper water, foundations that are built would not be used as much by them.

Westerberg (Approx. 1999) studied effects on fish catches at an older farm in Sweden and found that while it was operating, catches of benthic fish decreased. He hypothesized that low-frequency underwater noise was the probable cause.

Most sport and commercial fishing in the study area occurs within five miles of shore (Ebener 2003). Generally the population centers coincide with the concentrations of both types of fishing as well, and fishing is high within five to ten miles up or down the coast from the cities. Any new structure like a foundation placed in the open water where there was none before will become a new habitat and attract fish.

(Rehfeldt and others 2000) estimates a typical bottom disturbance fraction of 0.23% of a site's area with monopiles and 2.4% with scour protection [required at gravity foundations], but states that this is unlikely to be "…problematic except in exceptionally sensitive or rare benthic environments." Benthic communities depend upon the substrates in their local area, e.g. hard or soft bottomed, and detailed investigation of the substrates at

proposed sites would aid in evaluating the impact to the local bottom community. The loss of bottom substrate at Horns Rev was estimated to be 0.3% of the wind farm area (Noer and others 2000) and was "…not expected to lead to measurable impacts." Placement of cable can also potentially affect bottom-dwelling organisms (Danish Energy Agency and IEA CADDET 2000).

Construction of foundations though, can cause sedimentation on the bottom, thus impacting bottom-dwelling organisms, as well as fish larvae dependent upon the bottom for part of their life cycle. Sediment can also be put into suspension in the water column, thus reducing light penetration and affecting photosynthesis (Parkinson and IECS 1999).

There are rooted plants at shallower water depths in the lakes, and these depend upon the penetration of sunlight through the water column. At deeper depths, where light cannot penetrate, these plants do not exist. If plants grew on tower foundations, they could concentrate and could produce an effect on the local habitat available to other species.

Magnetic fields from cables could possibly affect fish that navigate with the aid of such fields (Rehfeldt and others 2000). However, the only information available comes from a site where a HVDC cable is in use, and HVDC technology is unlikely to be used in the near term in the study area.

There are some turtles along the south shore of Lake Superior, but these are non-significant populations (Trick 2002). Marine mammals do not occur in the study area.

Many times environmental issues, such as wildlife impacts, are voiced to object to wind power plants, when in reality the concern may grow more from the perception of an

alteration of the character of the landscape (Schwahn 2002), or a concern with visual impact (Brittan 2002).

2. Other environmental effects

Offshore wind farms have the potential for lower visual impact than onshore ones (Soerensen and others 2003). This will depend on their distance offshore, their size, and other factors. At distances of 20-25 km, offshore turbines begin to become invisible (Danish Energy Agency and IEA CADDET 2000).

In the opinion of (Nielsen 2002), projects should be designed to achieve a "…visual balance or a unified whole created by the turbines and the natural elements of the landscape." The design, spacing, height, type of turbine and surface treatment should all be considered. Wind farms "…should be seen as a clear coherent unit: that is, in geometric, often linear formations…" A farm should be delineated in an unambiguous way, by using a shape that can be identified. He notes that the visibility of offshore farms depends on the weather.

The trend in thinking in Europe is that smaller clusters of turbines are aesthetically preferable to larger ones (Brittan 2002). He notes the public there finds greater spacing between turbines better than closer spacing, as was done in the early California arrays.

Color choice on turbines and towers can also be used to reduce impact (Brittan 2002), although not necessarily in an obvious way. He notes that one train of thought prefers colors that do not strongly contrast, such as gray or off-white. "Others argue that …there should be no attempt to obscure them…a low-contrast color scheme is a subtle

attempt at camouflage, or worse, a form of public deception…they should boldly acknowledge their presence with white towers and nacelles."

(Stiesdal and others 1999) reports on experiments conducted to find the best colors for turbine blades and towers. Translucent blades were manufactured and viewed in different light. With gray weather or with the sun at the side or back of an observer, the blades were masked. However, blades appeared bright when viewed against the sun. They also tried different tower coatings. A "…light gray blue provided a somewhat better match with the background than the present-day light grey colour."

Schwahn (2002) notes that one effect of erecting many turbines in an area is to make landscapes look like each other, rather than preserving the individual character of each place. The visual disruption of a turbine is also dependent upon the presence of other tall structures in the area. "In an [existing] industrial landscape…wind turbines cause little disruption." However, the transformation of a landscape from pristine to one with a large number of turbines can lead to adverse public reaction, as was seen at San Gorgonio Pass in California (Brittan 2002).

Visualizations of a proposed project can be useful, but their effectiveness depends both on a viewer's "…professional training and their previous experience with wind turbines…A picture can both suppress the benefits of wind turbines and camouflage some of their visual effects (CAOWEE 2001c)."

Noise from operating offshore units may not be able to be distinguished above the noise of wind and waves (Meteoc Plc. 2000). They cite an estimate that a wind farm 5 km

offshore comprising 50, 1.5 MW turbines would result in a sound pressure level of 28 dB (Leq) at the beach. (Rehfeldt and others 2000) state that the sound power level for a multi-megawatt turbine would be 106 dB, however, there is not likely to be sound transmission from air to water. Although noise from underwater operation could potentially affect fish, no information on the frequencies which fish perceive is available (Rehfeldt and others 2000). Airborne noise may carry long distances over water. Construction with monopile foundations may include noise from the driving of the pile, which can be up to 150 dB (CAOWEE 2001c).

As the shallow water sites which make siting of offshore farms easier are also places where ships are more likely to have run aground, archaeological resources, such as shipwrecks may also be disturbed by construction of offshore farms.

Water pollution from leakage of lubricants, fuels, coolants, or abrasive material from turbines could occur during operation. (Rehfeldt and others 2000) recommend selection of low-toxicity and preferably biodegradable compounds for these purposes.

(Parkinson and IECS 1999) divide impacts into two types: site-specific and generic. She concludes that improved turbine design and good engineering practice can reduce generic impacts. Her summary matrix of generic and site-specific consequences of offshore wind is reproduced below.

Area of impact	Site specific	Generic	Justification
Fish	+		Depends whether area is important as a feeding or spawning area
Birds	+		Depends whether area is important as a roost or for feeding or overwintering
Mammals	+		Depends whether they are present in an area
Suspended sediments and benthis communities	+		matrix (see below)
Boat movements		+	Will always increase the chance of a collision
Contamination of sediments		+	Can be stopped by good engineering practice
Noise	+		Depends on people in the surrounding area

C. Economics

1. Economic factors

Early offshore farms installed in the 1990's were prototypes for the commercial ones installed later (Barthelmie and Pryor 2001), and the cost of electricity produced was expected to decline with larger projects. In Europe, the cost of offshore electricity production now competes with that of moderate onshore sites.

a) Capital costs

The technology for generating power from the wind makes significant improvement almost every year, and the cost per unit of power capacity falls steadily over time. It is therefore difficult to directly compare past capital costs with future ones. Projections based on current costs are often used in estimating future costs. (Danish Energy Agency and IEA CADDET 2000) list a cost comparison in percentages and in 1997 prices as follows for the capital invested.

Capital component	Projected cost (%) for onshore	Projected cost (%) for large offshore	Projected cost (1000 Euros/kW) for large offshore
Turbines	71	51	750
Grid connection	7.5	18	270
Foundations	5.5	16	240
Internal electrical grid	6.5	5	70
Engineering & administration	2.5	4	60
Electrical system	0	2	30
O&M Facilities	0	2	30
Miscellaneous	7	2	30
Totals:	100	100	1480

(Barthelmie and Pryor 2001) found that the grid connection is the most variable of the costs. Weak areas in the electric grid can require upgrading of onshore lines or substations as part of building a project. Both the distance to the coast as well as to the nearest appropriate connection point onshore were found to be important. (Wright and others 2002) cite a figure of 10-20% for the transmission equipment as a fraction of total offshore farm cost.

The Tunø Knob offshore farm in Denmark provides an example set of costs as a percentage of total costs. In 1997, percentages were as follows (Redlinger and others 2002).

Component	Share of capital cost (%)
Turbine	40
Foundations	23
Transmission cable (to coast)	13
Environmental analysis	10
Transmission cable (between turbines)	5
Electricity systems	4
Transmission cable (land)	3
Operating & control systems	2
Total	100

(CAOWEE 2001b) reports that offshore investment costs are 1.5 times as high as onshore. They indicate that the most important cost parameters are the distance to shore and the annual wind speed.

Reviews of European projects by (Barthelmie and Pryor 2001) and by (CAOWEE 2001b) of investment cost ranges are summarized below, and mid-range (mean) values have been calculated here. Investment costs can be seen to have shown a downward trend over the last decade.

Installation year	Investment (Euro/kW)	Midrange value (Euro/kW)
1991	1939-2150	2044
1994	1700-2600	2150
1995	2040-2200	2120
1996	1220	1220
1998	1455-1880	1668
2000	1200-1600	1400

Investment cost at Middelgrunden in Denmark was 1140 Euro/kW (Ostergaard 2001). At Tunø Knob, it was 2070 Euro/kW in 1997 prices (Danish Energy Agency and IEA CADDET 2000). (Olsen and Svenson 1997) list the investment cost at Vindeby in 1997 prices as 2200 Euro/kW.

For the foundations, (Juhl and others 1997) note that previous expectations were, "that the costs of the completed foundation were approximately proportional [to] the water depth squared (quadratic rule)." However, their work showed that for all three foundation types, there "…is a rather weak dependency of depth, totally disqualifying the expected 'quadratic rule'…." They expected this tendency to continue in deeper water depths for the monopile and tripod types, although not for the gravity type. They point out that this trend for the monopile and tripod types extends the offshore distances that can be considered for farms. In addition, "…costs do not rise proportional to the size of the turbine and the known installation equipment…for the foundation may handle the turbine and tower in one operation. This means that for the potential turbines of 0.5-1.5 MW the rule of thumb must be: 'The bigger the turbine-the smaller the relative foundation costs'."

The cost for submarine transmission cables is $620,000/km in the United States for voltages of 33 kV, and approximately twice that for 72 kV, including cable, installation, permitting and connection on both ends (Wright and others 2002). Installation of submarine cables is 1-3 times the cost of the cables themselves (Wright and others 2002).

At Long Island, the connection to the shore substation is estimated to cost $5 million/mile [$3M /km] for the underwater cable section, $3 million/mile [$2M /km] for

the onshore line, plus $4.5 million at the substation onshore (KeySpan Engineering Services 2002)

b) Operation & maintenance (O&M) cost

For projects of 20 years lifetime or longer, one of two approaches can be used to account for the need for refurbishment of the equipment (Danish Energy Agency and IEA CADDET 2000). In the first, "Assume a fixed amount per kWh produced plus a lump sum for major repair work at a certain point in time." The author suggests 0.01 Euro/kWh plus 30% of initial investment. In the second, a gradual increase in O&M expenses is expected. This could be 0.011 Euro/kWh, rising to 0.016 Euro/kWh.

(Barthelmie and Pryor 2001) report a 2000 estimate that annual O&M costs will be 30 Euro/kW-year for capacity plus 0.5 Eurocent/kWh offshore, as compared to 1-3% of installed cost onshore. (Jamieson and Quarton 1999) expect annual O&M cost to total 2% of initial investment, and (Bussel 1998) notes that 2% is the standard assumption in such analyses.

O&M costs may also rise over the lifetime of a wind farm. (Owen 1992) estimates that O & M costs offshore in Lake Michigan would be at least 1.6 cents/kWh, increasing at 3%/year for 25 years, and then 5%/year afterward. (Danish Energy Agency and IEA CADDET 2000) note a figure of 0.01 Euro/kWh was used in Danish feasibility studies.

c) Equipment design life

A study by (Owen 1992) of Lake Michigan wind energy production estimated that offshore turbines would last 30 years, versus 25 years onshore. He assumed a 1% annual decrease in energy production after 25 years. (Rehfeldt and others 2000) expected a lifetime of at least 20 years.

One offshore project proposed for the Great Lakes in Canada has a projected life of 40 years. Further details on it are shown in the table of proposed North American projects.

d) Cost of electricity produced

(Jamieson and Quarton 1999) modeled the breakdown of costs within the energy price and found the following component fractions.

Cost	Percentage
Turbines	19
Transmission system	18
O & M	15
Towers	11
Profit	11
Foundations	10
Wind farm electronics	9
Assembly & installation	4
Miscellaneous	3

(Barthelmie and Pryor 2001) and (CAOWEE 2001b) reviewed most of the European projects at that time and found the following production costs for wind farms, with the installation year, followed by the cost or range of costs, in Eurocent/kWh.

Installation year	Cost of electricity (Eurocent/kWh)	Mean wind speed, if available (m/s)
1991	8.5-8.6	7.5
1994	8.6-13.7	7.7
1995	6.6-8.17	
1996	5.4	
1998	5.7	
2000	5.3 – 8	

The cost figure for 1991 from Denmark of 8.6 Eurocents was said to be comparable to about 5 Eurocents for an onshore project. A calculation shows that in that country, offshore energy was 1.7 times more expensive than onshore energy. They note that comparison with onshore projects can be difficult because of differences in project lifetimes, interest rates, and O & M costs.

The greater economies of scale in future, larger projects, as well as the high availabilities expected, led them to expect future electricity to be produced for around 4.6-6.8 Eurocents/kWh. (Ostergaard 2001) lists the cost with current technology at Danish farms as 4.8 Eurocents/kWh, while noting that older farms in that country produce at higher costs. For farms of 200 MW capacity or greater, the cost of energy produced increases little with distance from the coast, whereas for smaller farms, the distance can be significant (Danish Energy Agency and IEA CADDET 2000). (Manwell and others 2002) cite figures in a study estimating the cost increase for a 200 MW farm at 30 km offshore vs. 5 km. Calculation shows that these energy cost estimates for the greater distance are 1.07 times higher than at the closer distance.

Although major reductions in production cost have been seen since the early 1980's, cost reductions in the future will occur at a slower rate (Danish Energy Agency and IEA CADDET 2000) due to maturing of the technology and the competitive market for equipment.

Estimated production cost for a 10 x 1.5 MW project in the Gulf of Bothnia, Finland was 0.33-0.35 FIM/kWh, compared with an onshore cost of 0.27 FIM/kWh (Holttinen and others 1999). The production cost would thus be 1.26 times as expensive offshore. At current exchange rates, the offshore cost would be 6.2 cents/kWh.

At Vindeby, (Olsen and Svenson 1997) report that the cost of energy in 1997 prices could be broken down as follows.

Energy cost component	Eurocent/kWh
Investment cost	7.3
O&M cost	1.1
Cost per kWh	8.4

(Manwell and others 2002) cites a 1994 study estimating that the costs of energy at Vindeby were 1.56 times as expensive as average onshore costs for electricity at that time.

The cost of wind power in Wisconsin offshore and the difference from inland wind were estimated by (Owen 1992) at the following costs. However, he indicated recently (Owen 2003) that due to the great decreases in capital costs since that study, these energy costs do not reflect current values.

	30-year lifetime cost	25-year lifetime cost
Inland wind in WI (1994 cents/kWh)	3.2	3.3
Offshore wind in WI (1994 cents/kWh)	3.1	3.6
Difference from inland wind in WI (as a % of inland)	96%	110%

(Owen 2002) estimates that of the five Great Lakes, Michigan would have the cheapest cost of electricity from offshore wind.

The cost addition from designing to withstand ice is not known for U.S. cases. An estimate was made by (Smith 2002b) that design for ice at 10 km from shore and 15 m water depth will add 25% more cost at a wind speed of 8.5 m/s and 42% at 7.5 m/s. However, experts in Wisconsin are not able to confirm these figures.

(Smith and Hagerman 2001) estimated the electricity production cost for hypothetical wind farms in Lake Erie under different combinations of distance from shore and water depth. Their estimates are reproduced below. Mean cost values are listed here, as they represent a cost for large-scale turbine installations across a region. A credit for the Federal Production Tax Credit is not included in their estimates.

Distance from shore (km)	Water depth (m)	Mean cost (cents/kWh)
5	15	10.0
5	30	15.1
15	15	10.7
15	30	15.7

2. Economic effect of a wind farm on other property values

In response to concerns that proposed wind farms in Washington state would detract from views and reduce property values, (Grover and others 2002) looked at onshore

wind farms with several different techniques. These included surveying tax assessors nationwide in counties with recently installed wind projects, reviewing academic literature on property values (including European literature), and using a model of local economic impacts. Among their conclusions was that there was no evidence that views of wind farms decreased property values

An article released with the study (Refocus Weekly 2002) noted that the study included 22 wind farms in 13 counties. It stated that assessors can be expected to provide an accurate indication of property value changes because of their requirement to be objective and their legal liability for the accuracy of their assessments. Further, it explained,

> "One of the likely reasons that wind turbines do not diminish property values is that not all people agree that views of wind turbines are undesirable…Some residents find views of the wind turbines attractive. If a homeowner dislikes having a view of the wind farm, they may move and sell their house to someone who likes the view…"

A study of ten different U.S. wind farms which came online from 1998-2001 examined property values before and after the farms were built (Sterzinger and others 2003). One of the ten locations analyzed included the wind farms in Kewaunee County, WI. They concluded that, "…the statistical evidence does not support a contention that property values within the view shed of wind developments suffer or perform poorer than in a comparable region."

A non-scientific indication of the absence of an appreciable effect on the values of other properties due to wind farms is found in (RENEWWisconsin 2000). They

interviewed an assessor, a builder and an appraiser/ realtor in northeastern Wisconsin near existing (onshore) wind farms. These persons stated there was no effect on property values from the wind farms. They indicated that potential homebuyers either did or did not accept home locations, and if they did not accept the wind turbines, shopped elsewhere. The proximity of wind farms did not appear to reduce the prices that new buyers were willing to pay.

D. Policy

1. Laws and regulations

Avoidance of land-use conflicts is one of the principle reasons to move toward offshore siting of wind farms. As (Owen 1992) points out, the productivity of an onshore farm can be compromised by an adjacent land use as simple as the establishment of a new tree farm on a neighboring property.

No offshore projects have yet been approved in North America. The first U.S. offshore projects will likely be completed off the Atlantic coast, and are expected to use the largest turbines available (Manwell and others 2003).

A thorough review of U.S. regulation of onshore projects can be found in (NWCC 2003). Some jurisdictions with onshore wind farms have developed codes to regulate these. For example, at Palm Springs, CA, turbines may only be sited in the following zones (Brittan 2002): watercourse, open land, energy industrial, and manufacturing. The city's ordinance specifies a neutral paint color, among other conditions.

The Council of the International Association of Marine Aids to Navigation & Lighthouse Authorities (IALA) has agreed to a standard for marking offshore wind farms (Pepper 2001). That standard calls for offshore farms to be marked as a unit under the following guidelines.

- Corners and other points of boundary direction changes should be marked with flashing yellow lights visible from all directions with a range of at least 5 miles and an availability of 99% or higher.
- Lights should be mounted on towers above the highest astronomical tide (HAT) but below the lowest point of rotor blade arc.
- Visible parts of foundations and tower bases should be painted yellow up to the height of lights. Use of retro-reflective materials should be considered.
- Sound signals may need to be provided, depending on visibility. Radar reflectors should be considered.

(Pepper 2001) notes, however, that radar reflectors have not proved effective at Blyth. Discussions in England concluded that a wind farm in direct line of sight of radar used for aircraft control could interfere with the radar accuracy when the turbines are rotating (Meteoc Plc. 2000).

a) International

(Hagan 2003) believes that proposed offshore farms, even in U.S. waters, would be of concern to the U.S.-Canada International Joint Commission. My review of their web site, however, showed that although they are involved in water quality and other issues, they do not appear to be concerned with issues usually associated with wind farms.

b) U.S. Federal

In U.S. ocean coastal waters, state jurisdiction ends and Federal jurisdiction begins at 3 miles (4.8 km) off the coast, (Manwell and others 2003). Among Federal agencies, the U.S. Department of the Interior and Army Corps of Engineers (ACE) would have primary responsibility. Other agencies with interests could be the Coast Guard, the Federal Aviation Administration (FAA), and the Department of Agriculture for fisheries.

The ACE administers or aids in administering several Federal laws, including the Clean Water Act (CWA); the Marine Protection, Research, and Sanctuaries Act; and the Rivers & Harbors Act (USACE 2002). The Rivers & Harbors Act includes waters that are used for interstate transport. This provision would affect many offshore sites in the western Great Lakes, as many are used in interstate transport. In ocean waters, the Rivers & Harbors Act has a jurisdiction to three miles (4.8 km) seaward from the coast. Activities covered include construction of structures, dredging or disposal of dredged material, excavation, filling, or other modifications to navigable waters. The ACE collaborates with the U.S. Environmental Protection Agency and Department of Commerce on administering

the CWA. Before the Corps may issue a permit for work, requirements of the Coastal Zone Management Act must also be met. These require that the project comply with an approved State Coastal Zone Management Program.

The Federal Coastal Zone Management Act is implemented by states in approved programs. In the study area, Wisconsin and Michigan have federally approved Coastal Zone Management Programs and Illinois' program is inactive (Kayser 2003). According to (Vargas 2003) "Under the Federal Consistency provisions of the CZMA, the Wisconsin Coastal Management program (WCMP) is charged with a review of activities with federal direct funding or requiring a federal (e.g. Corps of Engineers 404 permit) and/or state-DNR permit, that may have an impact on Wisconsin's coastal resources." The coastal program in Michigan is administered through its Department of Environmental Quality and can be found at (MI DEQ 2003).

The ACE would regulate offshore wind farms under Section 404 of the Clean Water Act (CWA) and Section 10 of the Rivers & Harbors Act of 1899 (Kuhne 2002). Under the CWA, for an offshore wind farm, they would regulate "…any fill discharged onto the lake bottom for construction of the tower foundations, as well as any underground transmission lines…" Under the Rivers & Harbors Act, they "…would include the turbine towers themselves, as well as the underground transmission lines…" under their authority to regulate construction, excavation and deposition of materials in navigable waters and work affecting the capacity and condition of the waters.

An offshore farm would likely require a Standard (Individual) permit (Kuhne 2002). Among the agencies whose comments would be solicited would be the NOAA, USCG, USF&WS and state departments like the WI DNR. A project like this would be evaluated for its effects on aquatic habitat, obstruction of navigation, change in aesthetics, especially from the shore, effect on community economy and recreation, and its energy needs. An Environmental Impact Statements (EIS) would be required if it is believed to significantly affect the human environment. The New England District Office of the USACE is now preparing an EIS for an offshore project proposed near Massachusetts.

The U.S. Navy has designated two military exercise areas near the study area. These are located in the western part of Lake Superior and the west central part of Lake Michigan.

Within the Great Lakes, there are ship courses recommended by the associations of lake carriers and ship owners. However, "…there are no Federally designated shipping routes, safety fairways or traffic separation schemes…any courses may be used…(Arroyo 2002)" A fairway is a lane or corridor in which no artificial island or fixed structure is permitted. A structure built in the lakes may be required to obtain a USACE permit, with a public approval process. The permitting process looks at the dimensions, mooring system, lighting, relationship to other navigational markers, water depth, and meteorological data for the area (Arroyo 2002). "No regulations changes are required other than issuance of the ACOE permit…it then become [sic] the USCG responsibility to ensure the structure is

properly marked, denoted on the charts, and informing the mariners and boaters of the same."

Ships traveling through the area would simply detour around the farm site once they knew of it. Of greater concern for navigation would be recreational boaters, who might object to obstruction of the site, although they would quickly adapt to it (Kuhne 2002). The principal concerns of the USACE would be the lake and its habitat.

The Federal Aviation Administration (FAA) regulates objects affecting navigable airspace under 14 C.F.R. Part 77 (Freedman 2001). The regional FAA office must be consulted for any project extending 200 feet [61 m] above ground level or near an airport runway, or on a waterway, or of a height above that of objects that normally traverse the local waters. (Conover 1998) reports that there is some flexibility shown by regional offices of the FAA regarding lighting on towers.

The most critical of the bird-related laws that is likely to be invoked is the Migratory Bird Treaty Act (MBTA) (Ugoretz 2002). In practice, the FWS works with project applicants to properly site structures that are a risk to birds (Lewis 2002) and exercises discretion in prosecution of unintentional harm to birds where applicants follow FWS guidelines. The FWS is encouraging Memoranda of Understanding (MOU) with project developers and would probably not recommend prosecution for bird deaths if an MOU is in effect (Manville 2003).

Although the Migratory Bird Treaty Act (MBTA) was originally intended to have a straightforward function, today it is more widely invoked to oppose projects where there is no nexus that can be found in other laws (Kerlinger 2002).

(Lewis 2002) notes that the ESA is in effect even where there is no other Federal involvement in a project. He states the USFWS has been discussing ways to better regulate bird impacts from communication towers, which are a major source of bird fatality.

Other Federal laws that may affect siting include:

- Archaeological and Historic Preservation Act
- Fish & Wildlife Coordination Act
- Endangered Species Act (ESA)
- Bald & Golden Eagle Protection Act

Further details on the expected applicability of regulations and laws to a U.S. wind farm off the Atlantic Coast can be found in (Freedman 2001).

c) State

(McCallum 2001) notes, "…Wisconsin Act 9 requires each electricity retail provider to increase the portion of renewable resources in its electricity portfolio to 2.2 percent by 2010." He predicted use of renewable energy would increase by five times

from the time of writing over the following ten years. As of 2001, about four percent of Wisconsin's energy was provided by renewables.

In Wisconsin, any electric generating project of 100 MW or more requires a Certificate of Public Convenience & Necessity (CPCN) from the WI Public Service Commission (WI PSC 2003). Generators under 100 MW require a Certificate of Authority (CA) if built by a utility and the cost is over a set percent of the utility's annual reserve (WI PSC 1999).

The Wisconsin Environmental Policy Act applies the National Environmental Policy Act to state agency actions. Issuing a CPCN is usually considered one of the following two types of actions.

- Type I- Preparation of an Environmental Impact State (EIS) is automatically required
- Type II- An Environmental Assessment is prepared to determine if an EIS is needed

The developer must provide information on two or more sites to the PSC and the Dept. of Natural Resources (WI PSC 1999). Applications are copied to all cities, towns and villages in the project area. Local government officials and property owners on or near potential sites are notified. Public information meetings are held, and owners, officials, and the media are notified. For a Type I action, a public hearing is held. The public can request a hearing in a Type II action, as well.

Because offshore farms will need to be 100 MW or greater (to be commercially feasible), they will require a CPCN from the Wisconsin Public Service Commission.

Another Wisconsin law potentially affecting offshore wind farm siting is the Public Trust Doctrine. It states that navigable waters leading into the St. Lawrence [Lake Michigan] are common highways to be used freely by state as well as U.S. residents without tax, impost or duty (Owen 1992). The law has been interpreted to mean that the State should protect the public's access to navigable waters. The bed of Lake Michigan is held in trust by the State.

(Owen 1992) analyzed the Doctrine from a legal viewpoint to assess how it could affect the siting of offshore wind farms. He points out that the WI DNR has routinely approved pipelines, power, and telephone lines over, under, and across navigable waters for decades. In cases, these approvals have included conditions restricting local anchoring and navigation. In some cases, distribution lines or transmission towers directly obstruct navigation. Approved oil pipelines carry with them the risk of oil spills. Further, the ACE also permits "…utility lines on or under the beds of navigable bodies of water." He concludes, "Use of navigable water to support wind turbines is basically similar to and thus not generally proscribed by public trust law." He also concluded that it should be possible to develop offshore farms that would meet the WI DNR requirements concerned with trust land lake bed development.

d) Local

An example of a local law is the ordinance passed by St. Ignace, MI (St. Ignace Wind Turbine Generators Ordinance 2002). This amendment to their zoning code established a number of site standards, including:

- Legal ownership of the land
- Setbacks from lot lines of ½ the tower height including blade
- Maximum noise levels of 72 dB at the lot line
- Lighting of towers according to FAA requirements
- Painting to blend in with surroundings
- Maintenance of generator, tower, and other structures, and certification of the structural integrity every ten years
- Removal of the equipment when no longer generating power

2. Public opinion

A relatively small amount of research has been done on the subject of opinions about wind energy. Very little has been done on opinions on offshore wind energy. Much opinion research that can be considered relevant has been in the United Kingdom, with most of the balance in Western Europe and the United States. Some studies that provide background for the examination of offshore wind-generation opinion have been broader in their subject, considering either wind energy as a whole, or energy generation as a whole.

a) Studies regarding energy generation

One of the first studies relevant to the present study was (Murray and others 1982) which examined attitudes toward visual impacts of electric generating stations in Wisconsin. One site chosen in that study was at the Edgewater power plant near

Sheboygan. They asked nearby residents to name the most pleasant features in the area. Residents mentioned features in this order, with frequency of mention following.

- Lake Michigan 27%
- Trees 25
- Flowers and gardens 14
- Sandy beaches 11
- Marshy areas 9

Residents were also asked to name the unpleasant features, and stated the following.

- Power lines 19%
- Roads (traffic) 19
- Housing developments 17
- Construction 15
- Lakeshore development 10
- Power plant (on lake) 8
- Power plant 4
- Railroad tracks 4

Of the most commonly mentioned negative features in all the communities sampled, the percentage of Edgewater residents who mentioned each of the negative features at least once was as follows.

- Highways (traffic) 63%
- Power lines 63
- Housing developments 57
- Plant and related features 40

Views in Solano County, California about use of energy and types and control of energy sources were considered in (Thayer and others 1989). They found that generally consumers lacked "…awareness of the environmental impacts of their own demand;" for energy. Among other findings was that the greatest percentage (54%) of consumers preferred that new supplies be located in their own county, followed by 35% favoring locations outside the county but in the state, and 2% preferred outside their state.

Consumers preferred that final decision-making on how and where electricity should be generated be made by the following parties.

- County voters 42%
- Private utility 26
- State government 19
- County government 8
- Federal government 5

Views on the magnitude of their own influence in choosing how electricity is generated included that 87% thought they had "…little or no influence in decisions…" and 56% wanted "…a considerable amount of influence…."

Attitudes on the importance of certain factors in selecting a power plant were rated on a Likert scale of 1 to 5, with 5 highest. In the Likert scale, a 1 is used to mean not important, and a 5 means very important (Thayer and others 1989). (A nearly identical scale was used for several questions in the survey in this thesis.) Among the responses, the following were chosen, with the mean importance rating listed.

- Safety to surrounding residents 4.75
- Damage to the environment 4.61
- Cost of electricity to consumer 4.59
- Visual impact 3.40

Respondents favored wind power over other types of generation, but differed widely on wind's visual impact. They rated factors in wind energy generation at the following values on a scale in which 1 meant most negative and 5 most positive.

- Public health & safety 4.76
- Environmental safety 4.68
- Acceptability for county 4.35
- Visual quality 3.13

Residents were also asked to state their plant acceptance distance in miles. Their responses for wind power plants were as follows.

Distance (mi.)	0.5	2	5	20	100	Unacceptable at any distance
Frequency of response (%)	19	22	25	26	6	2

The authors stated "…the high importance given to visual factors at county-level public meetings…leads us to suspect a connection between concern for visual impact and acceptance distance."

The study also inquired about the types of land uses from which power plants could be viewed. For wind plants, approval ratings were measured on a scale in which 1=disapprove, 2=neutral, and 3=approve, and were reported as follows. It should be noted that a mean reported rating alone does not distinguish between different distributions of responses, so the responses may have been bimodal on the scale, unimodal, or otherwise.

Viewer location	Work	Highways	Parks
Mean approval rating (1-3)	2.40	2.48	2.01

Concerns and benefits associated with power plants were measured as well. Wind powered plants were associated with the following major concerns.

- Noise 38%
- Visual impact 32
- Land use impacts 28

- Consumer cost 25
- Wildlife damage 13
- Health & safety 11
- Air quality 4
- Water quality 4

The following major benefits were reported.

- Safe for people 74%
- Non-polluting 72
- Economic 54
- Protects wildlife 46

The study quoted sources stating that debates over energy are about control and freedom, and that often communities make energy choices to gain more control over their own affairs. They thought such "…research points to a growing public concern for influence in energy supply decision…" The authors pointed out that the public is used to electricity benefits, but is less willing to share the costs of energy use.

b) Studies regarding wind energy

Opinion in both the U.S. and Europe strongly favors wind development, with 2/3-3/4 of people in favor, even where there are existing turbines (Brittan 2002). Brittan notes

that some Northern California and Dutch studies indicate that the support levels fall however, when specific developments are proposed, thus leading to the well known not-in-my-backyard (NIMBY) effect.

In some ways, wind energy is distinct from most other energy generation sources. One of the most important of these is the speed with which a new wind farm can be erected and can thus change the landscape in a very noticeable way (Nielsen 2002). Wind projects onshore typically require one to two years to permit and build. This is in contrast to conventional-fuel generators, which take from several years to a decade to permit and build. While conventional power plant buildings are of modest height above the ground and can be shielded on a coast or by higher surrounding landscape elements, often a wind plant is intended for the spots that are most conspicuous on the landscape, such as a ridge. Because people are often more likely to object to what they can see, the more visible wind plant attracts more attention than a conventional shielded one (which may have at least as much overall environmental impact). Wind generation advocates cannot easily hide its impacts, as the impacts are usually visible to everyone.

In contrast, nuclear power advocates "…have denied its impacts for decades, an easier task because most of the risks and negative effects of nuclear power are invisible and long-term (Schwahn 2002)." People cannot ignore wind farms, notes (Brittan 2002). Neighbors of a wind farm absorb most of the negative impacts, such as any noise or visual impact, while benefits accrue in a ubiquitous manner and are often invisible (Brittan 2002) (such as carbon dioxide reduction). He refers to findings in Holland that suggest that

support decreases as people live closer to turbines [and thus are able to see them more clearly].

The connection between one's awareness of energy sources and their impacts and his energy use habits becomes clear in certain circumstances. (Schwahn 2002) looked at a remote island in Great Britain where electricity had been provided by a diesel generator. When residents acquired a wind generator, they modified their electricity use and conserved it in order to allow the community's needs to be met from the turbine rather than reverting to the much noisier diesel generator.

(CAOWEE 2001c) states "Different individuals view wind turbines in accordance with their personal relation to a specific landscape…some people view wind power as a practical solution to sustainable development while others see it as a threat to landscape preservation." (Nielsen 2002) noted that one's opinion of a wind farm may vary depending on one's type of residence. Farmers may view wind turbines as objects that vary seasonally and with the weather, as other elements of their everyday world do. However, temporary [vacation] residents experience a dynamism in their normal urban lives, and so may value landscapes more for their stability. An addition of a wind farm would not be welcome to them. She noted that at Palm Springs, CA, there have been such reactions. She notes also "…the public is more prone to support a project they have had a fair chance to influence." In her work, communal ownership leads to higher cooperation by the public. In Denmark, most turbines are owned by individuals or cooperatives

(Nielsen 2002), and this economic commitment has been important in acceptance of wind power.

(Brittan 2002) notes that local permitting is more likely to be successful if local landowners have an equity ownership in the turbines. He contrasts Denmark and Germany, which have high support for wind energy and where local farmers or coops own many machines, with Holland, where support is lower and many are owned by large corporations. He theorizes that when something is not owned by the local person, that person is more alienated from the object, he enjoys it less, and perceives it as less beautiful.

(Brittan 2002) says that in this and other studies in the U.K. and Europe wind is favored in rural areas because rural dwellers "…are accustomed to using the land. Urban inhabitants, though, often view rural areas as playgrounds and are less likely to accept changes in land use especially...visible changes created by wind…" More rural residents supported building a wind plant in their region than did urban residents.

Wind energy acceptance was evaluated in a New Zealand Government study in 1994 (Brittan 2002). Almost 90% of respondents said wind energy should be used in New Zealand. "Two-thirds thought that wind was clean…one-fourth found wind turbines were unsightly…" Percentages who thought various energy sources were most environmentally acceptable were as follows.

- Wind 71%
- Hydropower 31

- Gas 4

In the United Kingdom, a number of surveys have shown that opinions about wind farms improved after respondents had a chance to experience the farms for themselves (Redlinger and others 2002). They listed twelve surveys in the U.K. on wind energy projects. In these, percentages in favor ranged from a low of 61% to a high of 96%, and those against ranged from 1% to 32%.

A 1985 study in Riverside County, CA found that even with publicity, "…the public was relatively disinterested in the wind developments (Brittan 2002)." He notes that some European researchers have theorized a concave-upward curve for acceptance versus time in which percentages are high before a project, dip to a low during installation, and then rise to a new high after installation.

In some areas, support for wind farms has grown to the point that they are tourist attractions. In Scotland at the Argyll & Bute farm, many tourists visit that area for its beautiful scenery and views (MORI Scotland 2002), but "have nevertheless not been aware of …[the wind farm's] existence...the wind farms are not seen as having a detrimental effect on their visit and would not deter tourists from visiting the area in the future…the majority viewed the prospect of having a visitor center at the site of wind farms favourably and would, in fact, be interested in visiting and subsequently finding out more information on wind farms and their operation." In Wisconsin (as in other places) the farm near

Montfort in Iowa County has placed an information sign just off U.S. Highway 18 to explain the project to motorists willing to stop.

(Soerensen and others 2003) refer to a German study on tourism which concluded that in general offshore wind farms would be accepted by tourists so long as they were not too close to the coast. However, they also mention a study in Sweden from 1998-2002 showing that tourists are more negative about offshore farms than the local public is, because the tourists prefer to see nature unaltered. (CAOWEE 2001c) notes that although an opinion survey in the Netherlands found that visual intrusion was the most important impact factor, it "…would not necessarily result in fewer visit [sic] to the affected location – the wind farm may also have positive effects on the visiting public, becoming a tourist attraction with visitor centres onshore and boat trips to the farm."

A study of wind farm siting in California looked at a six-county area and included residents, county officials, wind energy supporters, and utility representatives (Thayer and others 1991). County officials surveyed were supervisors, planning commissioners and staff planners. Among the findings were that residents were "…more likely to accept wind farms closer to their place of residence if they…feel more personally responsible for the environmental impacts of their own energy use…consider their home region to be of higher scenic quality…consider their home region to have higher quality of life." They state that other work by the authors indicates that although wind generation is "…relatively benign…" it elicits NIMBY reactions similar to "…other socially-necessary but locally objectionable land uses…" They concluded that questions over immediate and nearby

impacts or costs "…of wind farms often outweigh the obvious macro-scale advantages, provoking the NIMBY response."

Respondents in the study by (Thayer and others 1991) were asked how close to their home they would accept a wind farm. The mean response distance was five miles. A Likert scale was used to rate the attitudes toward wind farms. All populations sampled favored wind farms. Among the general population, 58% were in favor, 28% neutral, and 15% opposed. Among planners, 63% favored, 19% were neutral, and 19% were opposed.

In answer to questions about whether they would accept wind farms on the same site as various land uses, half or more of the general public respondents would have accepted wind farms at the following distances.

- Grazing land-Same site
- Roads or crop land-Adjacent
- Parks & open space-0.5 to 2 mi.
- Housing-2 to 5 mi.

Among planning officials, distances were:

- Grazing land and crop land-Same site
- Roads or highways-Adjacent
- Parks & open space-Within 2 mi.
- Housing-Within 5 mi.

Respondents were also asked to state their confidence "Regarding energy development and planning…" in various parties involved in energy projects: wind industry, utility companies, and county government/planners. The 5-point scale ranged from lack of confidence to total confidence. Confidence levels reported were as follows. Again, average reported values do not reveal the type of distribution of the responses.

- Wind industry 2.91
- Utility company 2.34
- County government 2.29

The study noted that respondent age had no correlation to wind farm acceptance distances. Another phase of the study included case studies of several sites in California. In conclusion, they noted some general conclusions about wind farm siting.

- The public was concerned with inoperative turbines
- "…public perceptions lag the state of the art by several years."
- The public likely "…questions the balance of macro- and micro-scale benefits versus micro-scale costs implicit in acceptance of a local wind farm."
- Local residents often "…prefer no change to their own 'backyards'."

The authors concluded that although the public was becoming interested in a transition to renewable energy sources, this can often not "…overcome concerted local objections and well-managed political opposition to proposed wind farms."

Previous studies showed that the electric system "…works against any real knowledge of the sources of one's own electrical energy or any sense of personal responsibility for the environmental impacts of these sources." Surveys by the authors also revealed that most Californians would accept wind farms within six miles of their residence.

They point out that wind farms in California contain larger numbers of turbines than other parts of the world and thus help to form an image in the public's mind that wind farms are conspicuous and large in scale.

A fair amount of research on wind energy opinions has been conducted in the United Kingdom. In Scotland, 430 residents were surveyed by telephone for their views on the existence of local wind farms (Dudleston 2000). Overall, residents were positive about wind farms. Of those who lived closer to the farms, 73% reported something they liked about them, while 67% of all residents reported a like. "Generally, those living closest to the wind farm were more likely to mention positive aspects of the wind farm…" Fewer residents experienced problems from the farms than had anticipated doing so, with 40% anticipating problems, but only 9% experiencing them.

The author pointed out that some residents feel a landscape is improved by a wind farm, while others feel the opposite. Noise and visual impacts were not issues for most residents. Of all respondents, 10% said they disliked "…the wind farm because it was unsightly or spoilt the view." Only 5% thought the landscape was spoiled by their local

farm. Noise was the cause of dislike for only 2% of respondents, and only 1% experienced a noise problem.

Benefits were experienced by 32% of the residents. Only 20% were aware of consultation by the farm developer and 17% by the local authority. The proportion that would be concerned with addition of another farm was 27%. Most respondents thought "…wind farms should be located in uninhabited areas and high on hills."

In Wisconsin, 233 residents were surveyed by mail regarding wind turbines (Kabes and Smith 2001). This survey concerned their impressions of operating wind farms owned by WI Public Service and Madison Gas & Electric Companies in Lincoln Township. This study is subject to a bias against wind farms, however (Sagrillo 2003). Both in its questionnaire, as well as publicity, there were probably influences that made the results less favorable to wind energy than they would have been otherwise. In particular, Sagrillo notes that some of the committee who drafted the survey were opposed to wind turbines, and wind opponents solicited negative responses to the survey. Among the findings were these:

- 89% reported no problems with shadows from blades, and 10% had problems
- 74% had no TV reception problems, with 22% experiencing problems
- 85% reported no noise problems; 14% had problems

When asked about how the turbines in Lincoln Township affected their health, respondents said:

- 80% Haven't been affected
- 11% Negatively affected
- 5% Positively affected

Asked about impact on their safety, the responses were:

- 84% No impact
- 7% Negative
- 5% Positive

Residents were also asked how close to turbines they would consider buying or building a home. Distance groups are condensed here.

- Less than or equal to ½ mile 30%
- ½ to 2 miles 19%
- 2 or more miles 42%

49% would host a turbine on their property if they could, and 44% would not. 48% would support a neighbor's installation, while 44% would not. Generation of tax revenue from the turbines was important to 62% of respondents, not important to 16%, and 17% were neutral or had no opinion about revenue.

A farm on the eastern side of Lake Michigan has been positively received according to the city manager of Mackinaw City (Matheny 2003) where two turbines have

operated since December 2001. With a green-power premium of 3 cents/kWh, output from these two turbines was sold out. Although the vast majority of area residents were reported to favor this small farm, there were some who complained of the noise, even though it met the 60 dB threshold at their lots. (Smith 2002a) believes that the opposition to an onshore farm at Addison, Wisconsin was an extreme case, and that generally there will be much less opposition to onshore farms in rural areas.

The importance of public opinion for the future of wind energy development can be summed up in the ideas of (Brittan 2002), who notes that success of the industry rests on bringing the public into decision making, both to convey information, as well as to get the public's concerns and suggestions on accommodating its views. Siting in the public's sensitive locations should be scrutinized when technical factors would make them favorable otherwise.

c) Studies regarding offshore wind energy

A study in Scandinavia examined public opinions on offshore wind development from projects in Denmark and Sweden (Soerensen and others 2002). It recommended that the public who are "…likely to be concerned about a project must be informed and consulted…" There should be open dialogue among the parties involved. They list three major ways in which the public can be involved:

- Information about ongoing development
- Participation in the planning and decision making process

- Financial participation in the project

By contrast, usually, the project developers "…passively inform people and carry out the minimum requirements regarding consultation." The public is usually not "…offered a direct influence on the decision making." The authors recommend that dialogue should be opened with the public and those concerned should not have to turn to the media for information. They conclude, "People who tend to accept the process also tend to accept its outcome."

In Denmark, a co-operative ownership structure has been important, particularly in circumstances where there are noise or visual impacts. Support for wind energy in Denmark runs at 70% in favor and 5% against it. At the Middelgrunden offshore farm outside the harbor of Copenhagen, ownership is 50% by the utility company and 50% by a cooperative. The layout of the turbines was initially criticized in public discussions; as a result, it was changed to a curved shape for aesthetic reasons. The wind turbine coop is composed of 8,500 members-primarily local people (Soerensen and others 2003). After extensive public involvement, support for the project was overwhelming. The only remaining opponents were "…a relatively small group of yachtsmen, fishermen, individuals and politicians…."

The Karlskrona offshore project in Sweden provided support for the authors' conclusions that it is a fallacy to think "…that the local public opposition can be overcome by rational decisions made by experts, and that people will eventually get use [sic] to

change…" In this project two surveys of people along the coast were distributed to learn which areas people were concerned about, and with what they were concerned. By incorporating public opinions into the project planning and decisions, local people were given "…a motivation to accept changes by giving them a say…." (Brittan 2002) relates personal experience that in the early stages of California farms, industry leaders had strong views of disregard for public opinion. In sum, the high levels of awareness and potential visibility for an offshore project make it important that the public participate in planning of the project.

Kerlinger (2002) notes that offshore wind power faces opposition from some environmentalists, who might be expected to support cleanly produced electricity, but appear to be in fact opposing energy projects that impinge upon members' vistas.

Leaning (2003) notes that at the proposed farm off of Massachusetts, while regional and national environmental groups are in support, local business, civic, and animal welfare groups oppose it.

An unscientific poll by a newspaper near the proposed Long Island offshore farm of 2,760 respondents found that 87% supported the project and 13% were opposed to it (Newsday 2002).

Indian Tribes may be expected to support offshore wind farm development so long as it does not compromise areas important to fish or birds (Ebener 2003).

E. Existing and planned offshore projects

Information on installed offshore wind projects in Europe was culled from a number of sources (Danish Energy Agency and IEA CADDET 2000), (ELSAMPROJEKT A/S 2000), (Wright and others 2002), (Thiringer 2000), (Barthelmie and Pryor 2001), (CAOWEE 2001b), (CAOWEE 2001a), (Lange and others 1997), (Manwell and others 2003), (Pepper 2001), (Meteoc Plc. 2000), (Clausager), (Parkinson and IECS 1999), (Manwell and others 2002), (AWS Scientific 2003). The earlier projects of these were meant to be pilot/pre-commercial projects.

For projects proposed or planned in North America, some information is proprietary and is not available at this early stage. However, some has been released publicly or was obtained through personal communications. Sources included (Kerlinger and Curry 2002), (Nai Kun 2003), (Cape Wind Associates 2003), (USACE 2003), (Bailey 2003), (Duffy 2001), (Leaning 2002), (USACE 2002), (AWS Scientific 2003), (Wilgar 2003), (AWEA 2003).

Existing offshore wind farms and those planned in North America are detailed in Tables 1 and 2 that follow.

Table 1: Existing Offshore Wind Farms

Year	Country	Location	Units (#)	Unit size (kW)	Capacity (MW)	Distance offshore (km)	Depth (m)	Foundation type	Hub height (m)	Rotor diameter (m)	Spacing (m)
1990	Sweden	Nogersund (Baltic Sea)	1	220	0.22	0.250	6	Tripod			
1991	Denmark	Vindeby (Baltic Sea)	11	450	4.95	1.5-3	2-8	Gravity	35	34	300 x 300
1994	Holland	Lely/ Medemblik (Ijsselmeer)	4	500	2.0	0.800	5-10	Monopile	39	40	200
1995	Denmark	Tunø Knob (Baltic Sea)	10	500	5.0		2-6	Gravity (Caisson)	40.5	39	200 x 400
1996 -97	Holland	I. Vorrink/ Dronten (Ijsselmeer)	28	600	16.8	Several	5	Monopile			
1997-98	Sweden	Bockstigen – Valor (Baltic Sea)	5	500	2.5	3-4	6	Monopile			
2000	England	Blyth Offshore (North Sea)	2	1900	3.8	1-2	6-8.5	Monopile			250
2000	Sweden	Utgrunden (Baltic Sea)	7	1425	10	7-8	7-10	Monopile			
2001	Sweden	Yttre Stengrund	5	2000	10						
2000-01	Denmark	Middelgrunden (Baltic Sea)	20	2000	40	3	3-6	Gravity			
2002	Denmark	Horns Rev	80	2000	160	14	10-20	Monopile	60-70	66-80	560

Table 2: Planned Offshore Farms in North America

Name	Location	Total capacity (MW)	# of turbines	Size of turbine (MW)	Hub height (m)	Rotor dia. (m)	Spacing (m)	Water depth (m)	Distance from shore (km)
CapeWind	Cape Cod, MA	468	130	3.6	79	100	533 x 800	<=15	
Winergy	MA, MD- 21 sites	976	271	3.6				18	<=24
LIPA (In pre-proposal stage)	Long Island, NY	100 – 140	25-50	2.0 - 4.0	<=80	79 – 100	690	<=21	5 – 10
Nai Kun	British Columbia	700	350	>= 2	80	72			15
AIM PowerGen	Lake Erie, Prov. Of Ontario	400	200	>=2			600 – 700		15

III.Opinion Survey

A. Need for/ Importance of perceptions in siting

Modern wind turbine technology allows wind farms to be placed in a wide variety of locations, from areas of low average wind speeds to high speeds and in a wide range of climates, from very cold to hot temperatures. Turbines can be located near demand centers or can be far from them and be connected via long-distance, high-voltage transmission lines. As the literature review has shown, they can be sited offshore as well as onshore. Their minimal environmental impacts, which are primarily local in nature, allow them to co-exist with many land uses. Although siting them offshore can create new vistas from shorelines, there is no *a priori* reason that these vistas are worse than views of onshore turbines or of views of other types of electric generating facilities. One could argue that offshore wind farms are inherently less attractive than pristine lake views. However, even that case is subject to the visual characteristics of the wind farm, which are determined by the engineering and design of the farm and turbines.

Much of what we perceive as attractive or unattractive results from our conditioning and the meaning we associate with a given object or view. One person may look at a wind turbine onshore and perceive a machine that is creating useful electricity while not generating air pollution. Another person may not be concerned with the absence of air pollution, but rather, see the alteration of his view shed. For an offshore wind farm,

one person may see an unwanted change to her views of a natural lake, while another person perceives an elegant way of capturing the power of lake winds and converting that energy for human use. Subjective perceptions and opinions about a generating facility may thus have a larger influence on its acceptance than any of its objective or intrinsic characteristics.

B. Method

1. Selection of respondents and areas to survey

The goal of the survey was to investigate the opinions and beliefs of the public concerning primarily offshore wind energy and secondarily wind energy overall. Study of onshore wind farms and non-wind energy sources were not the focus, as a number of previous surveys have investigated these topics. However, some questions on non-wind energy sources and on onshore wind were included to provide a broader context for responses and allow greater comparability to previous results. It was assumed that people living in counties bordering the lakes would be most interested and vocal about any future proposal to site wind farms offshore. Therefore, respondents in these counties were targeted for the survey. Although people living farther inland might have an opinion on wind energy in general, they would not be directly affected as much by offshore farms.

Initially it was hoped that a large survey of many residents could be undertaken. This would have required outside assistance to administer the survey. Funding to conduct a large survey was not available. Therefore, a much smaller survey of representatives of

the public was conducted without outside administrative assistance. This survey was therefore not a direct measure of public opinion, but was a measure taken through the eyes of persons who could be expected to understand and be familiar with public opinion in their own area. It would take a direct survey of the public to measure their opinions on this topic. The results of this survey should, however, indicate
the issues that are likely to be important to the public.

It was decided that the target geographic areas would be the counties bordering the Great Lakes in the study area. That is, the southern shore of Lake Superior and the western (and northern) shore of Lake Michigan. Counties bordering Green Bay were included.

Two groups of respondents were queried. One group consisted of public officials in these counties and several cities. The directors of planning or similar functions were sought to take the survey. Where no such official could be found, the next closest official was identified. In some cases these were chairpersons of planning commissions, in some they were County Clerks, and in some they were directors of park, forestry, or recreation departments. In many of the predominately rural counties there are very few county staff. This group totaled 35 addressees: 30 counties and five cities.

The second group was presidents or other principal officers of interest groups. These groups were of four types:

- Chambers of commerce
- Environmental groups
- Land or property owners groups

- Sportsmen's clubs

In total, 28 surveys were sent to these four groups, divided evenly with seven to each of the four groups. Groups chosen were either local organizations or the local chapters of geographically extensive groups. Statewide groups were not queried, as their views would have covered a wider range of opinion, and geographic differences in opinions could not be compared as easily. Within each subset of seven, an even distribution covering the extent of the study area was obtained by a further geographic subdivision. Of the seven, three respondents were sought along Lake Superior-one in Wisconsin and two in Michigan and four along Lake Michigan-three in Wisconsin and one in Illinois. A further breakdown in the Upper Peninsula was one in the western UP and one in the eastern. An even spacing along eastern Wisconsin was attempted.

Querying these four types of groups was thought to afford the chance to include a range of views of the public. Where multiple groups were available, a further refinement was applied by using information derived from the map analysis and available information on the constraints of water depth and distance offshore, and previous wind power density estimates. Thus, an interest group in a location where physical factors favored offshore wind farms was selected over one in another location where they did not, within the constraints of roughly even geographic sampling. This allowed the sample to be more representative of the locations where offshore farms are more likely to be considered in detailed site analysis in the future.

A few comments on the expected possible positions of these types of groups are of note. Chambers of commerce were suspected of being as likely to favor the economic benefits from wind farms as of alternative land uses. Environmental groups were thought to favor preservation of natural resources, as well as selection of more environmentally benign forms of generating electricity. Land or property owner groups were thought likely to favor preservation of property values as well as development of resources for local benefits. Sportsmen were thought to favor conservation of natural resources as well as use and managed consumption of them. In sum, each group selected could have identified reasons to support or oppose wind farms.

Officials and officers were identified with the aid of UW staff, through Internet searching, through associations of public agencies, through statewide or national umbrella organizations, and by referrals from people known of or found through these sources. In total, 63 surveys were mailed to individuals- both officials and officers. Considerable time was required in finding appropriate persons for these categories, but this time was thought to be a good investment in order to find persons in the right areas, the right types of groups, and who were likely to be able to be re-contacted. The contact information that I found turned out to be very up-to-date, as none of the 63 packages was returned from a bad postal address.

2. Formulation of survey questions

Questions were formulated by reviewing past opinion surveys (described in the literature review)- both in Europe and the United States- and using concepts relevant to

offshore wind energy. Not all questions that have been asked about energy or wind energy in the past were incorporated into the questionnaires for this study. Questions were formatted similar to that in previous studies wherever possible to allow for comparability. Searches were conducted through the UW library, on the Internet, and in on-line databases for opinion studies in the past on energy issues, including opinions on other offshore energy structures, such as oil or gas drilling platforms. Very little information on these other structures was available through these sources.

Three sets of questions were formulated. One set, the largest, was asked of all respondents. This was designated as Form B (for both types of respondents). It concerned ideas that most respondent groups should have had insight into, such as public responses to the advantages and disadvantages of various electricity sources, including wind generation, and perceptions about uses of the lake areas with respect to wind energy generation. A second set, much smaller, were questions asked of only the interest group officers. This was referred to as Form I. These questions concerned more subjective matters, such as attachment to the place of residence, as well as political action activities. The smallest set, consisting of one question, was asked only of public officials, and was referred to as Form O. The one question here was objective in nature and consisted of asking for a ranking of land-use types by area within the community. "Community" was recommended by professionals active in survey research as a better term to use than "county", to allow for answering by those representing counties, cities, or local interest groups.

Members of the thesis committee were sent drafts of the survey, and their general and specific comments were used to improve the survey. Professionals working in the energy field were also sent drafts of the survey forms, and they provided suggestions on improving the survey. The questions were pre-tested on other graduate students and full-time professionals working in the energy field. Testers were asked to time their taking of the forms. Times for the common set of questions (Form B) had a median value of 22 minutes without extensive commenting and 31 minutes with commenting. The form for interest groups (Form I) had a median testing time of eight minutes. As Form O consisted of only one question and it concerned knowledge which the respondent would be likely to be quite familiar with, it should not have taken more than a minute or two to complete.

Once the three sets of questions were finalized, they were combined into two versions. One had the common questions with the questions for officials, and the other had the common plus the questions for officers. All questions were numbered, and question numbers reflected the form type, as well. Most questions were closed ended, and the answer choices on most of these were numbered for pre-coding, as recommended. Open-ended questions were not pre-coded.

3. Survey procedures

Methods of conducting the survey followed the guidelines described in standard survey reference books, such as (Dillman 2000), (Dillman 1978), (Fink and others 1985), (Sapsford 1999), (Salant and Dillman 1994), and (Rea and Parker 1992), as well as in recommended guidelines from a course on survey research (Sweet 2002) and on the

Internet (AAPOR 2002) and (SESRC 2002). These methods (which rely upon the availability of extensive administrative support) were simplified for this study. However, key elements were retained.

In addition to the package containing the survey and related material, respondents who did not respond were contacted twice more in the order in which they were mailed the survey. The first reminder was by E-mail in most cases, or where an E-mail address was not available, by phone or postal mail. For those who had still not responded, the second reminder was by phone in most cases, with a few by E-mail.

Each respondent received a cover letter, survey form, photo sheet, and postage-paid return envelope. The cover letter is reproduced as an appendix, and included standard points recommended for mail surveys. Each letter was printed on UW-Institute for Environmental Studies (IES) stationery, individually addressed, and signed in blue ink as recommended. The survey form was the combined version for either an official or an interest group officer, and the forms are reproduced in the appendices. Return envelopes were stationery of the Institute for Environmental Studies and were addressed to me in c/o the Institute.

The photo sheet was made up of one photo and two photo simulations of offshore wind farms and was to give the respondent a sense of how offshore farms would look. It also appears in the appendices. One actual photo was of the Middelgrunden farm outside Copenhagen (comprising 20 turbines), and two simulations were shown from the proposed Nysted farm off of Denmark (proposed at 72 turbines). The photos chosen had known

distances from the viewer, were depicted at distances spanning those likely to be used in the study area, and were of a usable format. Although no U.S. photos or simulations were used, it is believed that U.S. offshore farms would not appear significantly different from Danish ones to lead to a difference in opinions about them. The most attractive photos and photo simulations available were purposely not used, so as not to bias the viewer; it was assumed that an especially attractive photo/simulation could have prejudiced the respondent to a more favorable response. The photo sheet was similar to the type a public official might receive in an application for a project permit.

In accordance with University and IES requirements, an application for an Exempt approval was made to the Human Subjects Committee (HSC) / Institutional Review Board. Forms I through V were filed, and both my advisor and I completed the required tutorial. After review by the HSC staff, an exemption was granted to the survey.

C. Responses

A total of 37 responses were received, comprising 23 from public officials and 14 from officers of interest groups. Response rates (%) were:

- Overall: 59
- Public officials: 66
- Interest group officers: 50

The response rate was higher from officials than from officers of groups, thus suggesting that more assertive methods for reaching interest groups may be more useful in future studies. Some addressees corresponded with me by E-mail, and the majority of these completed their surveys. A few officers of groups mentioned by E-mail that they were consulting with other group members, although most said nothing about this. Several addressees responded by E-mail with a refusal to complete the survey. Reasons given were lack of time, insufficient knowledge, discomfort with taking surveys, and inability to estimate the views of the public in their area. Each refusal was encouraged to provide any information possible. A phone interview was conducted with one refusing respondent during the reminder call.

Among the interest groups, the breakdown of types answering the survey was as follows in percent of the interest-group respondents:

- Environmental groups 36
- Land or property owners groups 28
- Sportsmen's clubs 21
- Chambers of commerce 14

Of the 37 respondents, 25 (68%) were from counties bordering Lake Michigan, and 12 (32%) were from counties bordering Lake Superior. Chippewa County, MI borders both lakes, but because more of its shoreline is along Lake Superior, it was assigned to that group.

Responses received were entered into Excel spreadsheets that I created for this purpose. Descriptive statistics were built into the spreadsheets for closed-ended questions. For open-ended questions, answers were reviewed, and answer groups were derived for use in evaluation. Aggregate response data for closed-ended questions are shown in tables in the appendices. Responses to individual questions follow, under each Form used. The response data spreadsheets appear in the appendices.

1. Common questions- Form B responses

a) Types of Electric Generation

Q1 Which fuel types would residents prefer for powering new electric power generation plant? (Number from 1 to 7 with 1= highest preference.) Mean score of each choice was as follows, and choices are re-ordered here according to score. Up to 24 responses were received, depending on which answer choice. There was a strong preference for natural gas fuel, followed by wind. Coal scored the lowest. Other fuel types mentioned were nuclear and solar.

- Natural gas 2.4
- Wind 2.6
- Hydroelectric 3.4
- Biomass 4.0
- Oil 4.1
- Other fuel type 4.2
- Type does not matter 4.4
- Coal 4.6
- Don't know 2.6

Q2 Where should new electric power generation plants of any fuel type be built? (Prioritize with 1=highest preference.) Responses are reordered here by mean score. Depending on which answer choice, up to 27 responses were noted. Most of the respondents thought residents would prefer that new plants be built in their state but outside their community.

- Outside community, but in the state 1.3
- Within your community 2.2
- Outside the state 2.7
- Don't know 2.2

Q3 How important is each factor to local residents in selecting the type and location for a new power plant? (1= Not important at all. 5=Very important.) The 36 responses yielded proportions as follows. The other factors named included adjacent land uses, effect on adjacent property or its value, need for the plant, and odors. Other factors, cost, and air emissions were the three factors with the highest proportions of Very important responses. Tax revenue had the highest proportion of "Not important at all." Proportions may not add to 1.00 due to round off errors in display of individual proportions. (Factors are divided between the two tables following.)

Importance	Cost	Use of land	Tax revenue	Views	Noise
1 (Not at all)	0.03	0.06	0.08	0.06	0.06
2	0.08	0.08	0.17	0.03	0.03
3	0.08	0.25	0.31	0.19	0.14
4	0.19	0.31	0.19	0.25	0.31
5 (Very)	0.61	0.31	0.25	0.47	0.47

Importance	Wildlife, birds	Fish	Air emission	Other environmental	Other factors
1 (Not at all)	0.03	0.00	0.03	0.00	0.00
2	0.14	0.17	0.08	0.17	0.00
3	0.14	0.17	0.11	0.14	0.00
4	0.36	0.31	0.19	0.31	0.20
5 (Very)	0.33	0.36	0.58	0.39	0.80

b) Wind Powered Generation

Q4 What would be the overall view of residents in your community of the possibility of building wind energy farms in this state? (Scale is 1-5, from 1= very

opposed to 5=very supportive.) For 37 responses, responses were fairly positive about this prospect.

Response choice	Proportion of the responses
1	0.00
2	0.05
3	0.41
4	0.30
5	0.24

Q5 What do you think would be the overall view of residents in your community of the possibility of building wind energy farms in their community? (Scale is 1-5, from 1= very opposed to 5=very supportive.) 37 responses showed responses were still quite positive, although only 43% here were supportive, compared to 54% supportive regarding the question of building within the state.

Response choice	Proportion of the responses
1	0.14
2	0.19
3	0.24
4	0.32
5	0.11

Q6 What would be the overall view of residents in your community of the possibility of building wind energy farms on land areas near the shoreline of the Great Lakes and near their community? (Scale is 1-5, from 1= very opposed to 5=very supportive.) 37 responses indicated that respondents were negative about building near the shoreline in their community.

Response choice	Proportion of the responses
1	0.30
2	0.32
3	0.24
4	0.08
5	0.05

Q7 If a wind farm is built on land close to the shore of one of the Great Lakes, how far inland from the shoreline should it be located? One respondent wrote in a distance in between two of the distances listed, but this was coded as the nearest distance of those provided in the question.

Response choice	(n=35)
Distance selected (Proportion)	0.80
Median distance (mi.)	3.5
Unacceptable at any distance (Proportion)	0.03
Don't know (Proportion)	0.17

Q8 Are residents generally aware of any existing wind energy farms? Of 37 responses, most residents were thought not to be aware.

1. 15 said residents in their area were aware
2. 22 said residents were not aware of any

Q9 What would residents say is the greatest advantage of existing wind farms? Responses mentioned were:

- Clean/no pollution
- Not imported/locally produced

- Expands choice of sources
- Better than alternative sources
- Sustainable/saves resources
- Source of revenue

Q10 Are these wind farms perceived to significantly affect the community or the environment around them? Of 14 answers to this question:

1. 10 said residents perceived they did
2. 4 said residents did not perceive they did

Q11 How are the existing wind farms perceived to affect the aesthetic environment around them on a scale from 1 (greatly detract from it), to 5 (greatly add to it)? In 10 answers, respondents thought that there was a perception of a somewhat negative effect on their aesthetic environment.

Response choice	Proportion of the responses
1	0.10
2	0.40
3	0.50
4	0.00
5	0.00

Q12 In what ways are these wind farms perceived to affect their surroundings or people? Number of positive responses marked for each offered possibility is shown, and the choices are reordered here by rank order.

- Are aesthetically negative- 8
- Affect wildlife, birds, or fish- 7
- Affect TV or radio reception- 4
- Other ways-("Noise") 5
- Provide a source of income- 4
- Cast shadows that are objectionable- 4
- Are aesthetically positive- 1
- Don't know- 1

Q13 What would residents say is the biggest drawback of existing wind farms? Respondents mentioned:

- Noise
- Visual impact
- Property value effect
- Wildlife or bird effects
- Land used
- The under use of wind energy

Q14 Has opinion of local people about existing wind energy farms changed since they were first built? Of 14 responses, half thought opinion had not changed.

1. 7 said it had

2. 7 said it had not

Q15 How has it changed from 1 (greatest decline) to 5 (greatest improvement)? 7 responses. Of those who thought opinion had changed, there was a perception of some more positive opinion over time.

Response choice	Proportion of the responses
1	0.00
2	0.29
3	0.29
4	0.29
5	0.14

Q16 Has there been any public discussion in your community about the construction or placement of wind farms? For 36 responses:

1. 6 said there had been
2. 30 said there had not been

Q17 How would you describe the amount and quality of public information and discussion? On a scale of 1 (Completely unsatisfactory) to 5 (Completely satisfactory), 6 responses indicated a split between those who thought it had been satisfactory and those who thought it had not been, with a somewhat stronger response toward high satisfaction levels.

Response choice	Proportion of the responses
1	0.00
2	0.50
3	0.00
4	0.33
5	0.17

Q18 Please list any specific locations on land where wind farms are likely to be unacceptable to local people? Specific areas named were the shoreline of one of the Great Lakes, Whitefish Bay, The Kettle Moraine, and the Great Lakes. Generic areas mentioned included near residential areas, homes or cottages; near populated areas, communities, or towns; near protected areas, bird migration routes, scenic areas or wetlands; near entrance roads; on hilltops, bluffs or promontories; overlooking water, shoreline properties, or the shorefront; everywhere; in low-wind areas; and descriptors of conditional criteria.

c) Offshore Wind Power

Q19 On a scale of 1 (Very opposed) to 5(Very supportive), what would be the overall view in your community of the possibility of building offshore wind energy farms in one of the Great Lakes? With 36 responses, the proportion of each response was:

Response choice	Proportion of the responses
1	0.25
2	0.25
3	0.31
4	0.14
5	0.06

Q20 On a scale of 1 (Very opposed) to 5(Very supportive), what would be the overall view in your community of the possibility of building offshore wind energy farms in one of the Great Lakes near your community? In 36 responses, answers were:

Response choice	Proportion of the responses
1	0.39
2	0.25
3	0.28
4	0.03
5	0.06

These two questions indicate respondents thought the public would be somewhat opposed to offshore farms in one of the Great Lakes, and strongly opposed to one offshore of their own community.

Q21 How compatible in all respects would a wind farm located offshore in the Great Lake nearest to your community be, from 1 (Not at all compatible) to 5 (Very compatible)? From 37 responses, the responses were as follows, indicating a view of fairly strong perception of incompatibility.

Response choice	Proportion of the responses
1	0.41
2	0.22
3	0.22
4	0.11
5	0.05

Q22 If an offshore wind farm were being built near your community, what aspects of the project would residents want to be able to influence, for example spacing of turbines and towers, arrangement, color, distance, etc.? Answers offered were one or more

of the provided answers (spacing, arrangement, color, distance); noise; a visual factor or views; locations; size or height; everything; whether they may be built at all; effect on or proximity to fish or birds; effect on boats; effect on revenue; safety; and proximity to homes.

Q23 How would residents want to influence these aspects, for example participation in the planning process, dialogue with the developer, etc.? Respondents listed the following ways. One or more of the provided answers in the question (participation in planning process, dialogue with the developer); input to regulatory agencies or regulations or zoning; input to or participation with design or designer; and input on energy costs.

Q24 Where the lake bottom conditions allow, wind turbines can be placed in a variety of arrangements on a site. What layout of towers would be most aesthetically pleasing to see? Of 36 answers, responses chosen were as follows, reordered here. Although clusters or small groups were preferred, there was an equally strong response of no layout would be preferred, and an even stronger feeling that they didn't know which layout would be best. Clustering is supported by research indicating that birds need gaps between groups of turbines in order to avoid having barriers to their flight.

- No layout would be pleasing to see 10
- In clusters or small groups 9
- Singly 3
- In a line or lines 2
- In a circle or semi-circle 0

- Other layout. (None suggested.) 0
- Don't know 12

Q25 What type of spacing of turbines and their towers would be most aesthetically pleasing to see? The 37 responses given were the following, here reordered. The "don't know" response scored higher than the top specific choice of "spaced as close as possible." This preference for closer spacing contrasts with preferences in Europe.

- Spaced as close as possible 13
- Spaced as far apart as possible 6
- Spaced somewhat apart 1
- Don't know 17

The strong response of "Don't know" to Q24 and 25 shows that respondents are hesitant to choose specific layouts for wind farms without further knowledge.

Q26 What color of paint on turbines and their towers would be most pleasing to look at? 37 responses are reordered here into rank order. In contrast to the previous two questions, respondents seemed to have a more definite opinion regarding color that would be perceived well, with light gray the top choice. Several respondents suggested it be a color that would blend in with surroundings. No other bright color choices were suggested. Brightly colored scored lowest, suggesting that painting to aid navigation of ships, boats and aircraft (as suggested by an international navigation authority) would have

to be carefully designed; it would have to be effective for navigation while not standing out from a great distance.

- Light gray 10
- Light blue 7
- White 5
- Other 5
- Brightly colored to stand out. 0
- Don't know 10

Q27 If an offshore wind farm were built at least 3 miles out into the lake and somewhere along the shoreline, what would be the minimum acceptable distance up or down the shoreline that a wind farm could be built? Of 37 responses, responses were marked in the following proportions, and the median distance was 5 miles.

Response choice	(n=37)
Distance selected (Proportion)	0.49
Median distance (mi.)	5.0
Unacceptable at any distance (Proportion)	0.32
Don't know (Proportion)	0.19

Q28 If another type of energy supply structure, such as an oil or gas-drilling platform, were built at least 3 miles out into the lake somewhere along the shoreline, how close from this closest shoreline point up or down the coast would this other type of energy

structure be acceptable? 12 distances marked with a median of 12.5 miles, plus 23 unacceptable at any distance and 2 don't know for a total of 37 responses.

These two questions suggest that there is much less support for fossil fuel structures offshore than for wind farms offshore. Unscientific surveys in recent years have also shown little support for fossil fuel structures in the lakes.

Q29 How would residents be likely to respond if an offshore wind farm were placed within sight of the following land uses? Up to 37 responses were marked for each land use. Scale is from 1=Approve to 3=Disapprove. Proportions of each answer for each land use are shown below. Uses for which the highest proportion of "Approve" were marked were industrial and agriculture. Uses for which the highest proportion of "Disapprove" were marked were year-around residential, park/recreation and tourist area. The only uses for which more of the "Approve" choice was made than the "Disapprove" were agricultural and industrial, suggesting that these are the preferred land use types offshore of which to site future wind farms. These data also suggest that respondents discount the possibility that offshore wind farms would become a tourist attraction.

Answer choice	Park / recreation	Agriculture	Tourist area	Residential, yr. - around
Approve	0.03	0.32	0.05	0.08
Neutral	0.14	0.44	0.11	0.05
Disapprove	0.84	0.24	0.84	0.86

Answer choice	Residential, vacation	Commercial	Industrial
Approve	0.05	0.24	0.39
Neutral	0.16	0.43	0.42
Disapprove	0.78	0.32	0.19

Q30 Are there any specific locations in the Great Lakes where offshore wind farms should not be built? 35 responses.

1. Yes 22
2. No 2
3. Don't know 11

Among those choosing "Yes" specific, locations suggested were: Lake Superior; northern Lake Michigan; northern or all of Lake Huron; Apostle Islands; and Whitefish Point. Generic locations were harbors or ports; shipping lanes; wildlife or ecological areas; developed areas; where visible from or off of a community; environmentally sensitive areas; historic sites, e.g. old lighthouses; everywhere; and descriptors of conditional criteria.

Q31 If wind farms were built somewhere near your community, do you think residents would be more likely to prefer them to be placed on land or offshore in a Great Lake? 37 responses. This question indicates that respondents to the survey perceive the public would prefer onshore to offshore wind farms. Percentages are in parentheses.

1. On land 24 (65)
2. Offshore 6 (16)

3. Don't know 7 (19)

Q32 Why do you think residents would make this choice? Reasons were listed by both those who chose offshore and those choosing onshore.

From the onshore choices, many individual reasons were given. They generally supported the perceptions that the lake areas are valued by residents for their natural scenic or other qualities. Any development except low density or small scale residential would be perceived as reducing the scenic value of the lakes. Some answers raised the view that onshore farms could be made to blend in more easily than offshore ones. One mentioned the stability of communities in the area, and that the lakes are a public resource. Some mentioned shipping, fishing or boating considerations. One answer was concerned about water pollution by turbines, and one suggested that turbines would increase evaporation of lake water. A few answers suggested the perception that offshore wind farms could not be built or would not be supported by residents.

Those choosing offshore listed perceptions that farms offshore could be placed behind islands so as not to be visible; that they would be less visible (without respect to islands); that there would be less noise; that they would not use the local landscape or would be aesthetically less obtrusive; and the wind is better offshore and there is less potential for conflict.

Q33-1 Please list any other concerns that you would expect local people to have about building offshore wind farms? Concerns listed were as follows:

- Other environmental impact 6
- Noise 5
- Effect on boating or fishing 5
- Views 5
- Ships or vessels 2
- Cost 2
- Noise 2
- Debris from towers or other components 1
- Setting precedent for other offshore development 1
- Residents' attachment to lake 1
- Tourism or visitors 1
- Property values 1
- Use of a public resource for private purpose 1
- Warning lights 1
- Shadows 1
- Safety 1

d) The Community

Q33-2 What are the most pleasant physical features in the area of this community- either manmade or natural? Specific features mentioned included the 35 islands in northern Lake Huron, Green Bay (the body of water), the Niagara Escarpment, Sheboygan

Marsh, Kettle Moraine, Port Washington Harbor, the Canadian Shield, Whitefish Bay, and Mission Ridge. Generic features were one or more Great Lakes, inland lakes or water; shorelines; views or vistas; forests or trees; wildlife; bluffs or hills; historic districts; church spires; the whole community; natural areas or landscapes or wilderness; harbors; farms or agricultural heritage; the low amount of development; trails; golf courses; and parks or open space.

Q34 What are the most unpleasant physical features in the area of this community-either manmade or natural? Specific unpleasant features included industrial development along the Fox River; [the] Crystal Lake development; the Federal building in Milwaukee; river outlets in the Milwaukee Harbor; and the Milwaukee County Stadium. Unpleasant generic features included industry or former industrial sites; quarries or mines; inappropriate commercial development; over development on bluffs or the waterfront; power transmission lines; junkyards or landfills; power plants; (in use) housing; run down or vacant housing or urban areas; natural area degradation; conflicting land uses; agricultural operations; and pollution.

e) About Yourself

Q35 On a scale of 1-5, what is your personal overall view of the possibility of building more wind energy farms? Of 37 answers, survey respondents were quite positive personally on wind energy expansion.

Response choice	Proportion of the responses
1	0.00
2	0.14
3	0.22
4	0.27
5	0.38

Q36 On a scale of 1-5, what is your personal overall view of the possibility of building offshore wind energy farms in one of the Great Lakes? In 36 answers, respondents were distributed across the scale in opinion, with a fair weighting toward the negative end.

Response choice	Proportion of the responses
1	0.25
2	0.17
3	0.33
4	0.08
5	0.17

These two question responses suggest that although respondents themselves were quite positive about further wind-energy development, they were somewhat negative about development offshore.

Q37 How long have you lived or worked in this geographic community? Median length was 25 years, suggesting very good familiarity with their communities.

Q38 Did you grow up in this geographic community? Over half had not.

Yes 16

No 21

2. Interest group only questions -Form I

a) Opinions and Views of Your Group/Association

QI1 Are your members generally aware of any electric generating plants using any fuel type near the community? Of 14 respondents, the breakdown was as follows. Interest group leaders thought that most of their members were aware of power plants.

1. Yes 9
2. No 4
3. Don't know 1

QI2 Who would members say should make the final decision about how and where to generate electricity used by people in your community? 13 respondents, and choices were chosen in the following numbers, here reordered. Other responses listed were combinations of state and local government and community residents or representatives. Interest group members were perceived to prefer local government control of siting and design of power plants. No support was noted for decision making by the Federal Government, by electric utilities, or by independent power producers. This agrees with preferences expressed in Solano County, CA.

- Local government 6
- State government 4
- Other 2

- Federal government 0
- Electric utility that serves your community 0
- Independent electricity-producing company 0
- Don't know 1

QI3 How much influence do members have about where and what types of new generating facilities are built near them? With a 1-5 scale, from 1 (No influence) to 5 (Strong influence), 14 responses were received. Data indicate that groups thought they had only a modest amount of influence currently.

Response choice	Proportion of the responses
1	0.14
2	0.36
3	0.36
4	0.14
5	0.00

QI4 How much influence would members like to have about where and of what type new generating facilities are? With a 1-5 scale, from 1 (No influence) to 5 (Strong influence), 14 responded, recording that they would like considerable influence. These two questions indicate members would like to have considerably more influence than they perceive they have now.

Response choice	Proportion of the responses
1	0.00
2	0.00
3	0.14
4	0.50
5	0.36

QI5 If new wind farms were built in your community, which of the following types of ownership structure would members be likely to support? (1 to 4, with 1= first preference.) Eight responses, with the mean for each choice as follows and put in rank order here. There was a strong preference for co-op ownership, as is also true for Scandinavian wind farms. Ownership by an independent power producer was the least supported. This result contrasts with the current trend in new power plant development.

- Owned by a co-operative 1.3
- Owned by a municipal utility 2.3
- Owned by an investor-owned utility 2.8
- Owned by an independent producer 3.0
- Other- (Not chosen by anyone)
- Don't know 1.0

QI6 How strong of a personal attachment would you say members have to this community and its surroundings? 1-5 with 5 = Very attached, 14 responses with a strong indication of attachment to their community and surroundings. Interest group members were perceived to be strongly attached to the community and its surroundings.

Response choice	Proportion of the responses
1	0.00
2	0.07
3	0.14
4	0.14
5	0.64

QI7 Does your group attend meetings or hearings of government decision-making bodies? 14 responses. Most groups reported attending meetings.

1. Yes 11
2. No 2
3. Don't know 1

QI8 Does your group write or call elected officials to express an opinion? Choices marked for 14 responses were these. All groups reported communicating with elected officials.

1. Yes 14
2. No 0
3. Don't know 0

QI9 Has your group taken a position on whether to vote for candidates for elected office based on their views on energy, environmental, or natural resource issues? 14 responses, with about half the groups each reporting taking positions and not taking ones.

1.	Yes	6
2.	No	7
3.	Don't know	1

In the one phone interview, an interest group officer who refused to complete the survey said he believed that most people choose electricity sources on the basis of the price, and if the cost of wind power were reduced to the same price, people would switch to it. He thought that Wisconsin residents were more conservative than in some other states, and that people in Wisconsin were concerned with the dollars that they could spend. His concern over existing wind farms in the state focused on noise and the size of turbines. He also mentioned the belief that energy corporations are making too much money, and it is not flowing to other people. His overall view of wind power was a one on a five-point scale, and his view of offshore wind was a three and a half on the scale. He mentioned an advantage of going offshore as that it would consider the value of land used for onshore turbines. He thought people would accept offshore if it were far enough away to be "attractive", but believed that no one can build anything in the lakes. He had lived in his community for eight years, but had not grown up there.

3. Public official only question-Form O

a) Land Use in Your Community

QO1 Rank the following land-use types for their occurrence in this community (1=greatest area). Among 22 responses, here reordered, mean rankings were as follows. Communities of the respondents were said to have large fractions made up of year-around residential land use and wild/natural use. Industrial land use was stated to occur in the lowest preponderance. Other uses included university use.

- Residential with year-around use 2.0
- Wild/Natural 2.9
- Agricultural 3.5
- Commercial 3.8
- Residential with vacation use 4.2
- Other 4.7
- Industrial 4.9

One public official who refused to complete the survey sent me a section of their regional plan for growth planning. This plan contained statements supporting renewable energy sources in general, but did not focus on wind generation.

D. Analysis of survey results

Some especially noteworthy results were obtained. The response to Q2 suggests that residents are not inclined to support any generating plants within their communities,

but only within their state. There was strong support for wind farms in general, both by the survey takers, as well as in their perceptions of the public's views. Respondents showed their personal support of more wind energy in Q35.

There was a definite preference for onshore wind farms rather than offshore farms. The importance of perceptions of aesthetics came out strongly. There was a general perception that offshore wind farms would be a negative aesthetic influence near the communities. It is suspected that respondents were comparing the possibility of wind farms to the absence of any energy facilities at the locations they considered. That is, they were not comparing the possibility of new wind farms to that of generating plants using other types of fuel.

Questions in the survey show that there is some awareness among the public of the relative advantages of wind generation compared to other types of generation. Q27 and Q28 on minimum acceptance distances up or down the coast elicited the following answers with 37 responses each, thus suggesting that the public would much rather have wind farms than other energy structures offshore.

Answer choice	Q27 Offshore wind farms	Q28 Other offshore energy structures
# Choosing infinite distance	12	23
Median distance of those choosing one (in mi.)	5.0	12.5
Don't knows	7	2

However, this does not appear to translate into strong absolute support for offshore wind energy. Q27 yields a distance of 8 km (5 miles) up or down the coast for siting of

farms. This value is used in the map analysis (below) to create buffer zones on each side of parks for estimating the power and energy production potential.

Q30 resulted in a number of responses saying that no location in the lakes would be acceptable, thus reinforcing the preference for onshore rather than offshore farms revealed in Q31. View-related reasons were the apparent cause of majority preference for onshore farms in Q32, as well as reasons cited by those who chose offshore farms.

Among interest groups, there was a strong preference for local control of decision making about power plant siting, as indicated in QI2, as well as a strong preference for community-based ownership structures, as shown in QI5. QI8 showed that the vast majority of interest groups express their views to elected officials. The greater representation of environmental groups and land/property owner groups among the respondents than chambers of commerce and sportsmen's groups may indicate that the former two groups are more inclined to oppose any type of offshore development in the lakes.

1. Geographic differences

To analyze whether there were geographic differences in opinion, respondents were divided into two groups of respondents: those living along Lake Superior and those along Lake Michigan. The two groups were compared on several key questions of Form B: question numbers Q19, 20, 21, 27, and 31. The tables below show the comparable responses for each of these questions. Lake Superior data is based on 12 surveys returned,

and Lake Michigan data is based on 25 surveys returned. The Z values shown are the results of Z tests on the two groups as described below.

Q19 On a scale of 1-5, what would be the overall view in your community of the possibility of building offshore wind energy farms in one of the Great Lakes? Lake Superior respondents appeared to be more opposed than Lake Michigan ones.

Response choice	Proportion for L. Superior (n=11)	Proportion for L. Michigan (n=25)	Z value
1 Very opposed	0.45	0.16	1.880
2	0.18	0.28	0.627
3	0.36	0.28	0.502
4	0.00	0.20	1.598
5 Very supportive	0.00	0.08	0.965

Q20 On a scale of 1-5, what would be the overall view in your community of the possibility of building offshore wind energy farms in one of the Great Lakes near your community? There was much more apparent opposition along Lake Superior than Lake Michigan.

Response choice	Proportion for L. Superior (n=11)	Proportion for L. Michigan (n=25)	Z value
1 Very opposed	0.73	0.24	2.763
2	0.18	0.28	0.627
3	0.09	0.36	1.660
4	0.00	0.04	0.673
5 Very supportive	0.00	0.08	0.965

Q21 How compatible in all respects would a wind farm located offshore in the Great Lake nearest to your community be? Lake Superior respondents appeared to think an offshore farm was much less compatible.

Response choice	Proportion for L. Superior (n=12)	Proportion for L. Michigan (n=25)	Z value
1 Not at all compatible	0.58	0.32	1.527
2	0.17	0.24	0.507
3	0.17	0.24	0.507
4	0.08	0.12	0.336
5 Very compatible	0.00	0.08	1.007

Q27 If an offshore wind farm were built at least 3 miles out into the lake and somewhere along the shoreline, what would be the minimum acceptable distance up or down the shoreline that a wind farm could be built? A higher proportion of Lake Michigan respondents selected a distance, but a lower proportion of them selected "Unacceptable at any distance." The proportion selecting "Don't know" was about the same. Among those who did select a distance, the median distance was higher for Lake Michigan.

Response choice	L. Superior (n=12)	L. Michigan (n=25)	Z value
Distance selected (Proportion)	0.33	0.56	1.291
Median distance (mi.)	2.0	12.5	
Unacceptable at any distance (Proportion)	0.50	0.24	1.582
Don't know (Proportion)	0.17	0.20	0.242

Q31 If wind farms were built somewhere near your community, do you think residents would be more likely to prefer them to be placed on land or offshore in a Great Lake? Lake Superior respondents appeared to be more likely to prefer onshore farms over

offshore compared to Lake Michigan respondents, and appeared to be less likely to choose "Don't know."

Response choice	L. Superior (n=12)	L. Michigan (n=25)	Z value
On land (Proportion)	0.92	0.52	2.366
Offshore (Proportion)	0.00	0.24	1.854
Don't know (Proportion)	0.08	0.24	1.139

To quantitatively assess whether there was a significant difference in responses between the two subsamples, i.e. the Lake Superior and Lake Michigan subsamples, a Z Test was applied. This test is used to analyze the difference in the two proportions of those choosing each answer (such as choice #1 on the Likert Scale) for each of the key questions. In order to indicate a significant difference in the two subsamples, the calculated value of Z would have to be greater than the following values. Alpha represents the fraction of the area under the curve in the tails at the high or low end of the distribution of samples that could have been drawn from the population. In a symmetrical distribution of samples, half of the alpha value would be in each of the two tails.

Value of alpha	Z
0.10	+/- 1.64
0.05	+/- 1.96
0.01	+/- 2.58

The results for the Z test showed that the majority of inter-lake response differences were not significant at these commonly used test levels. However, five tests did reveal significant differences between respondents living along different lakes. These answers were:

- Q19 (Offshore wind energy farm in one of the Great Lakes) Proportion marking "Very opposed" was greater for L. Superior at alpha=0.10.
- Q20 (Offshore wind energy farms in one of the Great Lakes near respondent's community) Proportion marking "Very opposed" was greater for L. Superior at alpha=0.01.
- Q20 (Offshore wind energy farms in one of the Great Lakes near respondent's community) Proportion marking middle choice on Likert scale, i.e. neutral, was greater for L. Michigan at alpha=0.10.
- Q31 (Prefer wind farms placed on land or offshore) Proportion marking "On land" was greater for L. Superior at alpha=0.05.
- Q31 (Prefer wind farms placed on land or offshore) Proportion marking "Offshore" was greater for L. Michigan at alpha=0.10.

Overall, the comparison questions suggested that there would be more opposition to offshore farms along Lake Superior than along Lake Michigan and that Lake Michigan residents would be more likely to take a neutral stance toward offshore wind farms.

2. Possible sources of bias

One possible source of bias in the sample selection would be targeting interest groups that were known of by UW staff or had a presence on the Internet. The potential Internet-presence bias may be compensated for by the likelihood that groups having this

presence would be politically more vocal as well and thus have greater influence on public policy concerning wind farms.

There may have been some self selection of completed surveys in that those who responded may have had perceptions of the public's views that were not representative of the whole public. This could have occurred, for example, if those who responded thought that the public in their community would be more politically active with the proposal of an offshore wind project, and so it was more important to the respondent that the views of their community be represented. There was no mechanism in the survey for measuring self-selection bias.

The survey obtained most responses from public officials, so a bias toward their perceptions, as opposed to the perceptions of interest groups, may have occurred. Also, most respondents lived near Lake Michigan, so the response set was skewed *de facto* toward their viewpoints rather than of those living near Lake Superior. This potential bias may be of little importance due to the fact that more people in the study area live along the shore of Lake Michigan than along Lake Superior.

Although many responses were received from Wisconsin and Michigan, no surveys sent to Illinois were returned, although one public respondent there sent general information related to the survey topics. Therefore, the results may not be representative of the views of Illinoisans in the study area.

IV. Estimation of Power and Energy Available

A. From a single turbine

After reviewing the capacities of wind turbines chosen for recent offshore projects in Europe and projects proposed in North America, a 2 MW turbine size was selected for this estimate. (Smith and Hagerman 2001) state that 2 MW is the minimum size that is economical for offshore projects. The Vestas 2.0 MW model has been proven in offshore use in Europe and is a well known technology at this time. It is available in 60 Hz models for countries like the U.S. (Grud 2000). It has a rotor diameter of 80 m, and the company is experienced at installations in the United States (Vestas 2003). A simplified estimate of energy output can be made using a reasonable capacity factor, estimated for Lake Michigan as 28% by (Owen 1992). Application of this factor yields a single-turbine output of 4,900 MWh per year. This should be considered a rough estimate, as the capacity factor is not site specific.

B. From wind farms

In order to find locations where the physical factors would allow for feasible siting of wind farms, I evaluated the near shore zones of the lakes within the study area using the <= 30 m depth and >= 5 km distance criteria (discussed earlier). The bathymetric maps were the (Canadian Hydrographic Service 1973) for Lake Superior and (Holcombe and others 1996) for Lake Michigan: the most recent published bathymetric maps available. I

found or interpolated the 30 m depth contour lines and marked them throughout the study area on working copies of the maps. I measured the 5 km distance interval from the shoreline and marked it also. Where the intersections of the two curves showed a shallow enough water depth at a large enough distance, these regions formed an initial set of sites to consider.

I measured the area of each potential siting area manually and then converted map areas (using the map scales) to areas on the lakes in square km. A spreadsheet was used for the calculations, and this appears in the appendices. I calculated the number of turbines that could be fit in each area using a spacing of nine rotor diameters in each direction (cited earlier). Although past spacings have often been rectangular in arrangement, with one dimension smaller, a square spacing gives a more conservative estimate of the number of turbines possible. Using the power of each turbine, the power capacity for the site was calculated. From this, and using the capacity factor (above), the annual energy output was calculated for each site.

The next steps involved identifying the potential constraints applicable to each site using several screening criteria. The opinion survey has suggested that the public would not want offshore farms sited within 8 km each way along the coast from an observer, and that they would disapprove of siting within view of a park. To eliminate potential areas near parks, I identified the locations of state and national park units within the study area using State maps and maps of the National Park Service. I therefore noted an 8 km buffer zone on each side of each park and used it to exclude potential sites within this buffer.

To identify locations that are especially important to birds, maps and descriptions in (Scharf and others 1979) were reviewed. Locations that he described where nesting and migration is concentrated were eliminated from further consideration in order to take a conservative approach to the estimate of the energy that could be produced. Although the evidence to date shows that the risk to birds from offshore farms is quite small, the perception of risk could facilitate opposition to sites in nearby areas.

As further considerations, the recommended courses for ships sailing on the lakes were reviewed as depicted on published navigational charts (NOAA various years). These courses were not used to eliminate possible areas, due to the likelihood that they would not be considered an automatic conflict (as described under policy considerations). Rather, they were another factor noted in reviewing the maps.

I also reviewed all of the navigation charts within the study area for submarine pipelines and cables, as well as U.S. Navy exercise areas and related zones. The obstructions and zones depicted as extending beyond 5 km offshore are noted in the table below. These would be potential limitations on construction and design of a wind farm, but should not automatically preclude the use of any particular site.

Lake (S/M)	Potential obstruction or zone	Nearest island or city on shore	Distance (km) and direction from city or island
S	Military exercise area	Ontonagon, MI	6-8 NW of
S	Emergency stores jettison area	Marquette, MI	14 NE of
M	Military exercise area	Port Washington, Sheboygan, Manitowoc, & Two Rivers, WI	8-14 E of
M	Submarine cable	Kewaunee, WI	To and beyond 37 ESE of
M	Submarine cable	Green Bay, WI	To 3 N of city
M	Submarine cable	Beaver Isl. – Naubinway, MI	From Isl. to mainland, and to 10 from Isl. or mainland

An offshore wind farm in the study area must be at least 100 MW to be commercially viable (Owen 2002). The proximity to a load center is also a key determinant of where an offshore farm would be built.

This analysis reveals that there are a fairly small number of potential sites in Lake Superior, and these are in discrete units apart from one another. By contrast, the potential sites in Lake Michigan are continuous over large portions of the study area, and are very extensive. Refer to the suitable areas map and the spreadsheet of estimated wind resource in the appendices. No constraints other than the screening criteria described above have been applied in this estimate. The estimated resource in sum is:

	Power capacity (MW)	Energy (Billion kWh/yr.)
Total potential	13,643	33.5
Restricted to sites screened as above	9,708	23.8

V. Onshore Wind Farm Comparison

A. Technology

The size of the onshore wind energy resource is estimated by (AWEA 2002) for each state adjoining the study area as follows. Totals for these states are calculated below.

State - Onshore	Power Potential (MW)	Energy Potential (Billion kWh/yr.)
Wisconsin	6,440	56
Michigan	7,460	65
Illinois	6,980	61
Total	20,880	182

In comparison to the estimate of the restricted offshore wind power resource for the study area, the total for the onshore power parts of these three states is approximately twice as much as the estimate for the study area, (which includes only the Upper Peninsula in Michigan). That is, 20,880 MW onshore compared to 9,700 MW offshore.

The estimated energy potential offshore is also less than the onshore energy potential estimated by AWEA. That is, 24 Billion kWh/year compared to 182 Billion kWh/year. If the eastern side of Lake Michigan were added, the offshore power and energy resources would be much greater.

In onshore projects, the MG&E 11 MW project used a spacing of ten by five rotor diameters (WI PSC 1998). This is less than for offshore projects.

For the prototype two-turbine onshore farm at Glenmore, WI, Widmer and Conover (2001) report a capacity factor of 22.5% and an average speed of 6.9 m/s for the first three years of operation. This capacity factor is lower than estimated by various sources for offshore, and the wind speed is lower than offshore. The availability was 85.5% during the third year. Onshore availabilities are reported in (CAOWEE 2001b) at 98%.

Projected life for the WPSC project in northeast Wisconsin was 30 years (WI PSC Approx. 1998). This is the same as the estimate for offshore life in Wisconsin.

A number of differences between onshore and offshore farms are discussed in the literature review. The voltages at onshore wind farms are typically in the range of 14-25 kV according to my review. This is somewhat less than voltages commonly used within farms offshore.

B. Environmental effects

Effects on birds are often mentioned when discussing wind farms. However, the data indicate that these are usually overstated. (Kerlinger and Curry 2002) reviewed data on effects on birds from onshore wind sites around the world. They concluded that

> "…avian collisions with wind turbines are rare events, especially when compared to other human-induced collision source… and other human induced mortality sources…At wind power sites in the United States, avian fatalities have not been suggested or demonstrated to be biologically significant (from a population perspective)…In Canada and Europe the same is true…Fatality rates at coastal sites in the Netherlands and southern Spain have been greater than at inland sites, but none of these impacts has been deemed significant from a population perspective."

They reviewed estimates of bird mortality rates from all significant sources in the U.S. For the approximately 15,000 onshore wind turbines, the estimated number of bird deaths was 28,000-40,000. This ranked as the estimated 12th largest source and fell well below the number of deaths from oil & gas extraction, or from coal strip mining & acid precipitation. More detail on onshore avian effects is available in this source.

(Percival 2001) lists bird onshore collision rates for ten sites in Europe, the Mediterranean and U.S. as ranging from 0.0 up to 3.4 collisions/turbine/year. My calculation using the data he reports shows a median rate of 1.04 collisions/turbine/year. He also lists disturbance distances from four onshore farms in Europe where distances are known, and these range from 1 to 800 m. For migrant land birds at onshore farms, he cites work in Holland in coastal areas finding a collision rate during migration of 0.01% -0.02% of birds passing through the farm, i.e. 1 in every 5,000 to 10,000 birds passing.

It is known that many birds are killed each year at night by being attracted to towers marked with navigation lights. For towers and smoke stacks over 200 feet tall, FAA requirements normally require night lighting to aid aircraft navigation. To reduce the association between turbine towers and other industrial structures, (Brittan 2002) recommends limiting tower height to below 200 feet where possible. Current turbines are often built on taller towers, so this recommendation may be difficult to implement.

There is an evolving debate between the FAA and the U.S. Fish & Wildlife Service over the impact on wildlife and on the appropriateness of marking towers of all types with lighting. Although the Federal Migratory Bird Treaty Act (MBTA) makes responsible

parties subject to prosecution for harm to birds, there is no enforcement of the law with respect to birds killed by tower lights that are required by the FAA. There is an ongoing discussion in the U.S. to reach a compromise that will ensure adequate aircraft safety, as well as safety for birds.

In the whole United States, [onshore] wind turbines cause 0.01-0.02% of avian fatalities (G.D.Johnson and others 2002). This ranks well below communication towers and high-tension lines (W.P.Erickson Approx. 2002).

(Howe and others 2002) studied bird effects from onshore farms in Kewaunee County, northeast Wisconsin. They found mortality rates at 1.29 birds/turbine/year. The estimate was said to be lower than a U.S. national rate of 2.19 birds/turbine/year. They concluded that compared to other human-caused mortality, these numbers are negligible. Effects on bats were also studied, but the evidence is inconclusive on the significance of these effects. Because birds use areas less the farther they are offshore, offshore wind farms have the potential to affect birds less.

For onshore farms, (Brittan 2002) notes that some experts think, "…roads and the erosion they cause are *the* principal environmental impact of wind energy." This effect is not present for offshore farms, of course, although where transmission cables come on shore there is still a potential for road and erosion impacts.

The visual impacts from offshore farms can be quite small if installations are placed several kilometers out. However, the high sensitivity of lakeshore residents to manmade structures in the lakes makes even such small impacts potentially objectionable.

Land use becomes much less of an issue offshore. Noise is less of an issue due to the distance from the farm to people. In the western Great Lakes, there are no marine mammals, so mammalian impacts from wind farms decline to only the small possibility of effects on bats.

C. Economics

Obtaining good data on the capital cost and the cost of energy produced is difficult because most projects are not publicly reported, and owners usually do not share performance and cost information (McGowin 2003). However, some information has been found.

The capital cost breakdown for an onshore wind farm in Denmark in 1997 was as follows (Redlinger and others 2002) (here reordered). Total capital costs were $1,002 / kW. A comparison of the percentage of costs between offshore and onshore projects is given in the literature review.

	Share (%)
Turbine	80
Grid connection	9
Foundation	4
Electric installation	2
Land	2
Consulting	1
Financial costs	1
Road	1
Control systems	-
Total	100

For U.S. onshore prices, several sources give data. For the 11 MW wind farm in northeast Wisconsin, the estimated capital cost was $1,300/kW (WI PSC 1998). Another 9.2 MW onshore farm in the same area had an estimated cost of $1,114/kW (WI PSC Approx. 1998).

For the early northeast-Wisconsin project at Glenmore, capital cost was $1,670/kW (Conover 1998), although because this was only 1.2 MW, the author expected that a larger project would experience a greater economy of scale. Of this total, the breakdown, reordered from greatest to least was:

Cost category	Cost ($/kW)
Equipment & construction	1,301
Utility's labor & expenses	258
Project development	94
Utility's general & administrative charges	13
Public participation plan	4

(Bolinger 2003) reports that cost varies widely and depends upon the quality of the resource, project size for economy of scale, and other factors. He and his colleagues examined costs of wind projects totaling 1,400 MW in recent years and found that energy costs including the Federal Production Tax Credit (PTC) [currently at 1.8 cents/kWh] were 3.2 cents/kWh, for the contract price, which was a capacity-weighted, average real, 25-year levelized price.

(Manwell and others 2002) report Federal data showing a capital cost of $1,000/kW in 1997 dollars.

Mid-range costs in a survey of onshore projects were reported by (McGowan and Connors 2000) as follows:

Cost of facility, including grid interconnections and access roads	1,000 $/kW
Fixed O&M costs	15.00 $/kW-yr.
Variable O&M costs	8.00 $/MWh (mills/kWh)
Cost of generation	6.05 cents/kWh
Capacity factor	25.0%

(U.S. DOE 1997) stated the price in 1997 dollars for energy in a class-4 wind regime as 6.4 cents/kWh with ownership by a generating company and a debt term of 15 years.

For production costs in northeast Wisconsin from wind of class 3, (Shaten and others 2001) report the predicted costs in cents/kWh as 5.48 in 2000 and 4.00 in 2005. A cost for large-scale onshore wind generation in Wisconsin is given in (WI PSC 2000) as $1,112/kW, with a levelized annual charge of 9.03 cents/kWh.

Operation and maintenance costs for 600 kW onshore machines according to the age and size of the turbine are given in percentage of investment cost (Redlinger and others 2002).

Age (years)	1-2	3-5	6-10	11-15	16-20
%	1.0	1.9	2.2	3.5	4.5

For large onshore projects, O&M costs of 0.75-1.5 cents/kWh are reported typical (Widmer and Conover 2001).

Overall, costs vary widely, depending upon the wind resource at the site, the financing, project life, and other factors. A comparison of the data cited above follows in several tables grouped by type of cost. Values published in Euros are converted for this table into U.S. dollars using the current exchange rate (1.088 USD/Euro). Then using producer price index PPI data at (USBLS 2003), original year values have been converted into equivalent year-2002 costs, and these are shown below. An index for 2003 is not yet available, and the PPI does not rise in every year.

Type	Location	Year	Offshore (original)	Offshore 2002	Onshore (original)	Onshore 2002
Capital ($)	WI	1998			1,300	1,376
Capital ($)	WI	1998			1,114	1,179
Capital ($)	WI	2000			1,112	1,113
Capital ($)	US	2000			1,000	1,001
Capital ($)	Europe	1998	1,815	1,921		
Capital ($)	Europe	2000	1,524	1,525		

Type	Location	Year	Offshore (Published)	Offshore 2002	Onshore (Published)	Onshore 2002
O&M	Europe	2001	33. $/kW-yr. + 0.5 cent/kWh	32. + 0.5		
Fixed O&M ($/kW-yr.)	US	2000			15.00	15.01
Variable O&M	WI	1992	1.6 cents/kWh, increase. 3-5%/yr.	1.8, 3-5%		
Variable O&M (%)	Europe (Standard in analyses)	1998	2.	2.		
Variable O&M (cents/kWh)	Denmark	2000	1.	1.		
Variable O&M	Europe	2000	1 cent/kWh + 30% of Initial investment	1. + 30%		
Variable O&M (cents/kWh)	Europe	2000	1.2 – 1.7 (fxn. of age)	1.2 – 1.7		
Variable O&M (cents/kWh)	US	2000			0.80	0.80
Variable O&M (cents/kWh)	US	2001			0.75 – 1.5	0.74 – 1.5
Variable O&M (%)	Europe	2001			1. – 3.	1. – 3.
Variable O&M (%)	-	2002			1.0 – 4.5 (fxn. of age)	1.0 – 4.5

Type	Location	Year	Offshore (Published)	Offshore 2002	Onshore (Published)	Onshore 2002
Production cost (c/kWh)	WI- 25 yr. Life	1994	3.6	4.0	3.3	3.7
Production cost (c/kWh)	Europe	1998	6.2	6.6		
Production cost (c/kWh)	Europe	2000	7.2	7.2		
Production cost (c/kWh)	US	2000			6.05	6.05
Production cost (c/kWh)	WI	2000			5.48	5.48
Production cost (c/kWh)	WI	2000			9.03	9.04
Production cost (c/kWh)	Denmark	2001	5.2	5.2		
Production cost (c/kWh)	US	2003			5.0	-

The adjusted values do confirm that capital costs offshore have been higher. Production costs vary widely, and these published figures do not illustrate that offshore energy costs are higher.

D. Policy and regulations

A variety of state statutes in Wisconsin influence onshore wind generation. These are summarized in (Sagrillo 2002). Most of them preserve and establish the right of state citizens to develop and use wind and solar energy. Laws and regulations applicable offshore are not so much local, but are more a matter of the use of the lake under state or federal regulations.

VI. Conclusions & Discussion

A. Conclusions

An opinion survey of representatives of the public in lakeshore counties showed that there was a strong preference among the 37 respondents for onshore wind farms rather than offshore ones, with 24 respondents (65%) choosing On land and 6 (16%) choosing Offshore; 7 chose Don't know. Wind energy overall was supported, with respondents perceiving that their communities would support more wind farms in their states and near their communities. Opposition became apparent, however, with the possibility of siting farms on land close to shoreline areas.

When respondents were asked about likely community responses to an offshore wind farm placed within sight of various land uses, the only two uses in which the Approve choice was chosen more than the Disapprove choice were industrial and agricultural uses, suggesting that these are the preferred land use types offshore from which to site wind farms.

When asked about siting of energy structures up or down the coast from the shoreline point near their community, respondents were much more likely to accept wind farms than oil or gas drilling platforms. Generator fuel types (including renewable fuel choices) that respondents perceived their communities would favor showed a preference for cleaner fuels.

Respondents had a median time in the community of 25 years, suggesting very good familiarity with their own communities. There was a strong perception among interest groups that their members would favor local ownership and decision making concerning generation plant siting.

Several key questions were chosen to compare opinions about offshore wind near Lake Michigan to opinions near Lake Superior. These were questions 19, 20, 21, 27, and 31, asked of all respondents. The responses from the two lakes were compared using a statistical test for the difference in proportions. Most differences in the proportions marking each answer choice between the two lake subsamples were statistically insignificant. However, five answer proportion differences were significant.

- Regarding the possibility of offshore wind farms anywhere in one of the Great Lakes, the proportion "Very opposed" was greater for Lake Superior than Lake Michigan at alpha=0.10.
- Regarding offshore wind farms in one of the Great Lakes near the respondent's community, the proportion "Very opposed" was greater for Lake Superior at alpha=0.01.
- Also regarding offshore wind energy farms in one of the Great Lakes near the respondent's community, the proportion marking the mid scale (neutral) choice was greater for Lake Michigan than Lake Superior at alpha=0.10.

- Regarding the preference of whether wind farms near the community should be placed on land or offshore, the proportion marking “On land” was greater for Lake Superior at alpha=0.05.
- Also regarding the preference of whether wind farms near the community should be placed on land or offshore, the proportion who marked “Offshore” was greater for Lake Michigan at alpha=0.10.

Initial screening for physically suitable sites for offshore farms was done with recommended criteria of 5 km or greater from the shore and in water depth of 30 m or shallower. A map analysis of potential sites in the study area revealed that there are very few suitable sites along Lake Superior, and each of these has constraints of some type. In contrast, there are many potential sites of considerable size along Lake Michigan, and many of these have no major constraints. Successive screening criteria which were applied included limiting offshore wind farms to those not offshore from concentrations of birds, limiting them to outside of an 8 km buffer distance from parks, and limiting the sites to those likely to have a power capacity of 100 MW or greater.

After applying these three additional screening criteria to potential sites with the right combination of distance from shore and water depth, the power and energy potential within the study area was estimated to be over 9,700 MW and 24 Billion kWh/year. Potential Lake Michigan offshore sites have a much higher power and energy potential than Lake Superior ones do.

Because the statistical tests revealed that there are some geographic differences in perceptions between Lake Michigan and Lake Superior, with Lake Superior respondents more opposed to offshore farms on some test questions than Lake Michigan residents, there is some correspondence between the differences in perceptions and the differences in the wind resource available.

Both offshore and onshore wind farms pose minimal risk to birds. Some evidence suggests that birds would use over-water areas less the farther they are from land. Information available suggests that beyond 1 km offshore, there is little risk that birds will be using the same space as wind farms.

Law and regulations applicable offshore tend to be more concerned with state and federal jurisdictions regarding use of lakebeds and construction in lakes, rather than with local land use restrictions, which are typically applied to onshore projects.

B. Discussion

Offshore wind energy production is a developed means of generating electricity in Europe at present, and the early experimental wind farms have evolved to ones of significant size, with more planned for the future. Several sites have been proposed for development in North America, with at least two in Canada and three in the United States, on both the Pacific and Atlantic coasts and in the eastern Great Lakes.

At any wind farm, public reactions are a crucial factor in permitting and siting. Wind farm developers pursue projects in communities that are more receptive to them. Public opinion would be a key test that projects in the Great Lakes would have to pass.

Responses to the survey questions appeared to be based primarily on the perception that the public would find offshore wind farms easier to see than onshore ones, and that they would find them aesthetically negative. The survey did not suggest to respondents that either of those two perceptions was factual. The fact that only five of the statistical tests resulted in significant differences between the two lakes may be due to having too small of sample sizes to yield more power in the tests.

Several factors are likely to be important in siting future wind farms. The color of turbines and towers should be carefully chosen, as the survey found that colors that blend in are preferred. Yet, international navigation recommendations are for colors that stand out. Ownership is another crucial factor, with co-op ownership preferred by representatives of the public (in contrast to the current trend toward independent power producer ownership). Regarding plant siting, decision making at the local level is also preferred over that of state or higher levels. As the survey indicates, siting wind farms offshore of industrial or agricultural areas is also advisable.

The power estimate developed here for offshore potential is somewhat over half of the onshore power potential of the three states bordering the study area, even though it includes only part of the offshore areas of these states.

A variety of cost values from Europe and the United States, when converted to U.S. dollars and inflated to a recent common year, do confirm that capital costs offshore have been higher. Energy production costs have varied widely, however, and published figures

(when converted to recent year values) do not show that offshore energy costs have been higher than onshore energy costs.

Visual impacts from wind farms can be less offshore, depending upon distance from the coast. However, this depends upon weather offshore, as well as how well onshore wind farms can be visually screened by landscapes.

C. Suggestions for future research

Future investigations of appropriate offshore siting should concentrate on Lake Michigan areas, both for the above considerations, as well as to take advantage of the greater electricity demand centers along Lake Michigan. They should focus on areas that are offshore of agricultural or industrial areas as sites most likely to receive positive public reaction to siting proposals. They should also attempt to survey the public with more extensive information provided about the comparative impacts and advantages of different energy sources. Determining reliable estimates for the cost of adapting to ice loading on foundations would be useful. Updating and expanding the information on bird concentration sites along the lakeshores would be valuable. Also useful would be basic research on how wind farm construction and operation sounds would be perceived by fish.

VII. Bibliography

AAPOR, 2002. Web site, American Association for Public Opinion Research, http://www.aapor.org/.

Ackerman T. 2002 July-August. Transmission systems for offshore wind farms. Renewable Energy World: 49-61.

Arroyo J, 2002. E-mail, September 24.

Assel R, Janowiak JE, Young S, Boyce D. 1996. Winter 1994 Weather and Ice Conditions for the Laurentian Great Lakes. Bulletin of the American Meteorological Society 77(1):71-88.

Assel RA, Quinn FH, Leshkevich GA, Bolsenga SJ. 1983. Great Lakes Ice Atlas. Ann Arbor, MI: Great Lakes Environmental Research Laboratory. 115 p.

ATC. 2002. 10-Year Transmission System Assessment, Full Report. American Transmission Company. 153 p.

AWEA, 2002. Web site, American Wind Energy Association, http://www.awea.org/.

AWEA, 2003. E Newsletter, American Wind Energy Association,

AWS Scientific. 2003. Long Island's Offshore Wind Energy Development Potential: Phase 2 Siting Assessment. Long Island Power Authority. 58 p.

Bailey B. 2003. Offshore Wind Energy Development in the US [PowerPoint show]: NWCC.

Barthelmie RJ, Pryor S. 2001. A review of the economics of offshore wind farms. Wind Engineering 25(3):203-213.

Bolinger M, 2003. E-mails, February 23, 28.

Brittan GG, Jr. 2002. A View from Lake Como. In: Pasqualetti MJ, Gipe P, Righter RW, editors. Wind Power in View. San Diego, CA: Academic Press. p 215-221.

Bussel GJWv. 1998. The Development of an Expert System for the determination of Availability and O&M costs for Offshore Wind Farms.

BWEA, 2001. Web site, British Wind Energy Association, http://www.offshorewindfarms.co.uk/reports/faqs.html#deep.

Canadian Hydrographic Service, 1973. Bathymetric Chart Lake Superior, 1:600,000, [Map]. Ottawa, Ontario: Surveys & Mapping Branch, Dept. of Energy, Mines & Resources.

CAOWEE. 2001a. Concerted Action on Offshore Wind Energy in Europe, Activities & Prospects. 39 p.

CAOWEE. 2001b. Concerted Action on Offshore Wind Energy in Europe, Resources & Economics. 37 p.

CAOWEE. 2001c. Concerted Action on Offshore Wind Energy in Europe, Social Acceptance, Environmental Impact & Politics. Report nr NN5-1999/00562. 50+ p.

Cape Wind Associates, 2003. Web site, www.capewind.org.

Clausager I. Approx. 1999. Impact assessment studies of offshore wind parks on seabirds with special reference to the Tuno Knob wind park. Ronde, DK: National Environmental Research Institute, Dept. of Coastal Zone Ecology. 120-125 p.

Conover K. 1998. Wisconsin Low Wind Speed Turbine Project Development. Global Energy Concepts, LLC. Report nr TR-111438.

Danish Energy Agency. 2001. Recommendation for Technical Approval of Offshore Wind Turbines. Danish Energy Agency. 35 + Appendices p.

Danish Energy Agency, IEA CADDET. 2000. Electricity from offshore wind : a joint report of the Danish Energy Agency and the IEA CADDET Renewable Energy Technologies Programme. Oxfordshire, UK: Danish Energy Agency

IEA CADDET Renewable Energy Technologies Programme, Centre for Renewable Energy. Report nr 1900683067. iv, 102 p.

Dillman DA. 1978. Mail and telephone surveys : the total design method. New York: Wiley. xvi, 325 p.

Dillman DA. 2000. Mail and Internet surveys : the tailored design method. New York: J. Wiley. xvi, 464 p.

Dudleston A. 2000. Public Attitudes Towards Wind Farms in Scotland. Edinburgh, Scotland: Scottish Executive Central Research Unit. 40 p.

Duffy DJ. 2001. Cape Wind Associates LLC, An offshore renewable energy project [PowerPoint show].

DWEA, 2002. Web site, Danish Wind Energy Association, www.windpower.org/.

Ebener M, 2003. Phone conversation, April 3.

Eber K, 2001. E-newsletter, USDOE Energy Efficiency & Renewable Energy Network,

Elliott DL, Holladay CG, Barchet WR, Foote HP, Sandusky WF. 1987. Wind Energy Resource Atlas of the United States. Golden, CO: U.S. Department of Energy, Wind/Ocean Technologies Division,. Report nr DOE/CH10094-4.

ELSAMPROJEKT A/S. 2000. Horns Rev Offshore Wind Farm Environmental Impact Assessment, Summary of EIA Report. Fredericia, Denmark: I/S ELSAM,

Eltra amba. Report nr EP00/025/JKG/HG. 15+ p.

EREN, 2002. Web site, DOE Office of Energy Efficiency and Renewable Energy, www.eren.doe.gov/.

Feld T, Rasmussen JL, Sørensen PH, 2003. Article, RAMBØLL, www.ramboll.dk/windpower/PDF/OMAE99.pdf.

Fink A, Kosecoff JB, Business Library Johnson Foundation Collection. 1985. How to conduct surveys : a step-by-step guide. Beverly Hills: Sage Publications. 119 p.

Freedman JM. 2001. Offshore Development of Wind Energy Facilities: Jurisdictional and Regulatory Analysis. Atmosperic Information Services. 22 + App. p.

G.D.Johnson, W.P.Erickson, M.D.Strickland, M.F.Shepherd, D.A.Shepherd, S.A.Sarappo. 2002. Collision mortality of local and migrant birds at a large-scale wind-power development on Buffalo Ridge, Minnesota. Wildlife Society Bulletin 30(3):879-887.

Grover S, Fifield A, Josephson A, Whelan B. 2002. Economic Impacts of Wind Power in Kittitas County, Final Report. Portland, OR: ECONorthwest.

Grud P. State of the Art Offshore Wind Technology; 2000 June 27; Wilhelmshafen, Germany. Deutsches Windenergie-Institut GmBH. p 26-37.

Haapanen E, Maattanen M, Koskinen P. Offshore Wind Turbine Foundations in Ice Infested Waters; 1997 April 10-11; La Maddalena, Italy. p 307-314.
Hagan J, 2003. E-mail, March 7.
Holcombe TL, Reid DF, Virden WT, Niemeyer TC, Sierra RDl, Divins DL, 1996. Bathymetry of Lake Michigan, 1:500,000, [Map]: Great Lakes Environmental Research Laboratory.
Holttinen H, Maattanen M, Holttinen E, Haapanen E. Offshore Wind Power in the Ice-Infested Waters of the Gulf of Bothnia, Finland; 1999 March 1-5; Nice, France. p 361-364.
Howe RW, Evans W, Wolf AT. 2002. Effects of Wind Turbines on Birds and Bats in Northeastern Wisconsin. UW-Green Bay. 103+ p.
Jamieson P, Quarton DC. Technology Development for Offshore; 1999 March 1-5; Nice, France. p 289-293.
Juhl H, Rasmussen JL, Birck C, Gormsen C, Lyngesen S. Cost-Efficient Foundation Structures for Large Offshore Wind Farms; 1997 April 10-11; La Maddalena, Italy. p 407-419.
Kabes DE, Smith C. 2001. Lincoln Township Wind Turbine Survey. River Falls, WI: University of Wisconsin-River Falls Cooperative Extension.
Kayser D. 2003. Federal Consistency Coordinator [PowerPoint Show]: NWCC.
Kerlinger P, Ph.D., 2002. E-mail, September 18.
Kerlinger P, Ph.D., Curry R, Ph.D. 2002. Desktop Avian Risk Assessment for the Long Island Power Authority Offshore Wind Energy Project. Curry & Kerlinger, L.L.C. 61 p.
KeySpan Engineering Services. 2002. Wind Turbine Interconnection Study. Long Island Power Authority. 27 p.
Kirby NM, Xu L, Luckett M, Siepmann W. 2002. HVDC transmission for large offshore wind farms. IEEE Power Engineering Journal:135-141.
Kuhn M, W.A.A.A.Bierbooms, Bussel GJWv, Ferguson MC, Goransson B, Cockerill TT, Harrison R, Harland LA, Vugts JH, Wiecherink R. 1999. Structural and Economic Optimisation of Bottom-Mounted Offshore Wind Energy Converters. p 22-27.
Kuhne K, 2002. E-mails, November 7, 8.
Lange B, Aagaard E, Andersen P-E, Moller A, Niklasson S, Wickman A. Offshore Wind Farm Bockstigen - Installation and Operation Experience; 1997. p 300-303.
Leaning J, 2002. Web site, Cape Cod Times, www.capecodonline.com/.
Leaning J, 2003. Web site, Cape Cod Times, www.capecodonline.com/.
Lewis S, 2002. Phone conversation, December 2.
Manville A, 2003. E-mail, January 23.
Manwell AL, Manwell JF, McGowan JG. 2003. A year 2000 summary of offshore wind development in the United States. Energy Conversion and Management 44:215-229.
Manwell JF, McGowan JG, Rogers AL. 2002. Wind energy explained : theory, design and application. Chichester ; New York: Wiley. vii, 577 p.

MAPP, 2001. Principal Power Supply Facilities Existing and Authorized: Mid-Continent Area Power Pool.

Matheny K. 2003 January 12. Wind turbines a turbulent issue for area. Traverse City Record Eagle;1-8.

McCallum S. 2001. State of Wisconsin 2001 Energy Policy. Madison, WI. 43+ p.

McGowan JG, Connors SR. 2000. Windpower: A Turn of the Century Review. Annu. Rev. Energy Environ. 25:147-97.

McGowin C, 2003. E-mail, January 15.

Meteoc Plc. 2000. An Assessment of the Environmental Effects of Offshore Wind Farms. Prepared for UK ETSU. Report nr ETSU W/35/00543/REP. 67 p.

MI DEQ, 2003. Web site, Michigan Department of Environmental Quality,, http://www.michigan.gov/deq/0,1607,7-135-3313_3677_3696---,00.html.

Middelgrunden Wind Turbine Co-operative, 2003. Web site, http://www.middelgrunden.dk/.

MORI Scotland. 2002. Tourist Attitudes towards Wind Farms. Scottish Renewables Forum & the British Wind Energy Association. Report nr 18037. 5 p.

Murray BH, Kremmel D, Randall J, Burgess D. 1982. Public Attitudes toward the Visual Impacts of Electric Generating Stations: U.S. EPA Environmental Research Laboratory Duluth MN. 68 p.

Nai Kun, 2003. Web site, Nai Kun Wind Development Inc., http://www.naikun.ca/app_content.cfm?content=home.

Newsday, 2002. E-mail,

Nielsen FB. 2002. A Formula for Success in Denmark. In: Pasqualetti MJ, Gipe P, Righter RW, editors. Wind Power in View. San Diego, CA: Academic Press. p 115-132.

NOAA, various years. Navigation charts, various, [U.S. Coast & Geodetic Survey, Dept. of Commerce.

Noer H, Christensen TK, Clausager I, Petersen IK. 2000. Effects on birds of an offshore wind park at Horns Rev: Environmental impact assessment. Danish Ministry of Environment and Energy, National Environmental Research Institute, Dept. of Coastal Zone Ecology. 110+ p.

NREL, 1986. Web site, National Renewable Energy Lab, http://rredc.nrel.gov/wind/pubs/atlas/titlepg.html.

NREL, 2003. Web site, National Renewable Energy Lab, http://www.nrel.gov/gis/il_wind.html.

NWCC, 2003. Web site, NATIONAL WIND COORDINATING COMMITTEE, http://www.nationalwind.org/.

Olsen FA, Svenson J. Cost-Optimising of Large-Scale Offshore Wind Farms; 1997 April 10-11; La Maddalena, Italy. p 181-188.

Ostergaard I. 2001. Wind and Sea: Off shore wind energy in Denmark and Europe. EnergiCentre Denmark.

Owen B. 1992. Preliminary Examination of the Near-Shore Wind Resource of Western Lake Michigan. Madison: WI Energy Bureau. Report nr RR: 679.

Owen B, 2002. Phone conversations, August 7, November 6.

Owen B, 2003. Phone conversation, February 27.
Parkinson K, IECS. 1999. Environmental Consequences of Offshore Wind Power Generation [M.Sc. Dissertation]. Hull, UK: The University of Hull. 55+ p, http://www.hull.ac.uk/iecs/MScwindfarm.doc.
Patel MR. 1999. Wind and solar power systems. Boca Raton: CRC Press. 351 p.
PB Power. 2001. Electrical Network Limitations on Large-Scale Deployment of Offshore Wind Energy. British Department of Trade & Industry, ETSU. Report nr ETSU W/33/00529/REP/1. 40+ p.
Pepper L. 2001. Monitoring & Evaluation of Blyth Offshore Wind Farm, Navaid Requirements for UK Offshore Wind Farms. AMEC Border Wind, Prepared for UK ETSU. Report nr ETSU W/35/00563/REP/2. 13+ p.
Percival SM. 2001. Assessment of the Effects of Offshore Wind Farms on Birds. Ecology Consulting, Prepared for UK ETSU. Report nr ETSU W/13/00565/REP. 61+ p.
Rea LM, Parker RA. 1992. Designing and conducting survey research : a comprehensive guide. San Francisco: Jossey-Bass Publishers. xxiv, 254 p.
Redlinger RY, Andersen PD, Morthorst PE, United Nations Environment Programme. 2002. Wind energy in the 21st century : economics, policy, technology, and the changing electricity industry. New York: Palgrave. xvii, 245 p.
Refocus Weekly. 2002 November 6. Windfarms have no negative impact on property values, according to U.S. analysis. Refocus Weekly.
Rehfeldt K, Santler F, Stracke M, Schreiber M. 2000. North Sea Offshore Wind-A Powerhouse for Europe. Hamburg, Germany: Greenpeace e.V. 87+ p.
RENEWWisconsin, 2000. Web site, RENEWWisconsin, www.renewwisconsin.org/.
Rodionov S, Assel R, Herche L. 2001. Structured Modeling of the Relationship Between Great Lakes Ice Cover and Atmospheric Circulation Patterns. Journal of Great Lakes Research 27(4):486-502.
Sagrillo M. 2002. Wisconsin State Statutes Referencing Wind Turbines: 99-00 Wisconsin Statutes. p 2.
Sagrillo M, 2003. Phone conversation, January 25.
Salant P, Dillman DA. 1994. How to conduct your own survey. New York: Wiley. xvi, 232 p.
Sapsford R. 1999. Survey research. London ; Thousand Oaks, CA.: Sage. ix, 258 p.
Scharf WC, U.S. Fish and Wildlife Service. Office of Biological Services., Dredged Material Research Program (U.S.). 1979. Nesting and migration areas of birds of the U.S. Great Lakes (30 April to 25 August 1976). [Washington, D.C.?]: Fish and Wildlife Service. 1 v.(various pagings) p.
Schwahn C. 2002. Landscape and Policy in the North Sea Marshes. In: Pasqualetti MJ, Gipe P, Righter RW, editors. Wind Power in View. San Diego, CA: Academic Press. p 133-152.
SESRC, 2002. Web site, WSU, http://survey.sesrc.wsu.edu/.
Shaten R, Joeres E, Nunez-Pacheco C. 2001. Strategic Assessment of Renewable Energy in Northeastern Wisconsin: Report Summary. Madison, WI: Energy Center of Wisconsin. Report nr 206-R. 10+ p.

Smith K, 2002a. Phone conversation, May 7.
Smith K. 2002b. Introduction: What is Offshore Wind Energy Development? [PowerPoint show]: National Wind Coordinating Committee.
Smith K, Hagerman G. 2001. The Potential for Offshore Wind Energy Development in the United States. p 1-12.
Soerensen HC, Hansen LK, Hammarlund K, Larsen JH. Experience with and Strategies for Public Involvement in Offshore Wind Projects; 2002 November; Belgium.
Soerensen HC, Hansen LK, Hansen R, Hammarlund K. 2003. European Thematic Network on Wave Energy, Public Acceptability, Final Report. Copenhagen, DK
Svalov, SE: SPOK/EMU
Hammarlund Consulting. Report nr NNE5-1999-00438. 22+ p.
St. Ignace, MI, City Zoning Ordinance, 2002, Wind Turbine Generators, Ord. 575, 1-6, Sept. 3.
Sterzinger G, Beck F, Kostiuk D. 2003. The Effect of Wind Development on Local Property Values. Washington, D.C.: REPP. 77+ p.
Stiesdal H, Petersen KØ, Thisted J. An Adaptable 1 MW Wind Turbine; 1999 March 1-5; Nice, France. p 741-744.
Sweet J, 2002. Web site, www.ssc.wisc.edu/~sweet/.
Thayer RL, Hansen HA, University of California Davis. Center for Design Research. 1989. Consumer Attitude and Choice in Local Energy Development. Davis, Calif.: Center for Design Research University of California Davis. 35 p.
Thayer RL, Hansen HA, University of California Davis. Center for Design Research. 1991. Wind farm siting conflicts in California : implications for energy policy. Davis, Calif.: Center for Design Research University of California Davis. 43 leaves p.
Thiringer T. Integration of large sea-based wind parks-how much power electronic devices are needed in order to avoid power quality problems on the grid?; 2000 July 16-20. IEEE. p 1277-1279.
Trick J, 2002. E-mail, phone conversation, December 20, 21.
U.S. DOE. 1997. Project Financial Evaluation (Description). U.S. Department of Energy. p 7-1 to 7-5.
Ugoretz S, 2002. Phone conversation, August 27.
USACE, 2002. Web site, U.S. Army Corps of Engineers, http://www.nao.usace.army.mil.
USACE, 2003. Web site, U.S. Army Corps of Engineers, http://www.nae.usace.army.mil.
USBLS, 2003. Web site, U.S. Bureau of Labor Statistics, http://www.bls.gov/data/home.htm.
Vargas AM, 2003. E-mail, January 15.
Vestas, 2003. Web site, Vestas Wind Systems,, http://www.vestas.dk/.
W.P.Erickson. Approx. 2002. Bird Mortality from Anthropogenic Causes. p 7.
Watson G. Final Report; 2000 March 1; Rutherford Appleton Laboratory, England. p 26+.
Westerberg H. Approx. 1999. 165-168 p.
WI DOA, 2003. Web site, WI Dept. of Administration, Division of Energy, http://www.doa.state.wi.us/docs_view2.asp?docid=770.

WI PSC. 1998. Environmental Assessment, MG&E 11 MW Wind Energy Facility. WI Public Service Commission.

WI PSC, 1999. Web site, WI Public Service Commission, http://psc.wi.gov/electric/.

WI PSC. 2000. Arrowhead-Weston Transmission Project Environmental Impact Statement. Madison, WI: Public Service Commission of Wisconsin.

WI PSC, 2003. Web site, WI Public Service Commission, http://psc.wi.gov/electric/.

WI PSC. Approx. 1998. Supplemental Environmental Assessment, WPSC 9.2 MW Wind Energy Project. WI Public Service Commission. 11 p.

Widmer L, Conover K. 2001. Wisconsin Low Wind Speed Turbine Project Third-Year Operating Experience: 2000-2001. Global Energy Concepts, LLC. Report nr 1004041.

Wilgar J, 2003. Phone conversation, E-mail, and literature, Jan. 7, 13.

Wright SD, Rogers AL, Manwell JF, Ellis A. Transmission Options for Offshore Wind Farms in the United States; 2002.

VIII. Appendices

Cover letter for survey

Survey questionnaires

- Both groups (Form B)
- Interest groups (Form I)
- Public officials (Form O)

Photo and photo simulation sheet of survey package

Survey response data spreadsheets

- Both groups (Form B)
- Interest groups (Form I)
- Public officials (Form O)

Wind energy resources of potentially suitable sites

Maps of favorable sites for wind farms in Lake Superior portion and Lake Michigan portion (In back)