COMMISSION OF THE
EUROPEAN COMMUNITIES

COOPERATION

Equitable Testing and Evaluation of Marine Energy Extraction Devices in terms of Performance, Cost and Environmental Impact

Grant agreement number: 213380

EquiMar

Deliverable D5.1
Guidance protocols on choosing of electrical connection configurations

DRAFT

Grant Agreement number: 213380

Project acronym: EQUIMAR

Project title: Equitable Testing and Evaluation of Marine Energy Extraction Devices in terms of Performance, Cost and Environmental Impact

Deliverable D5.1

Guidance protocols on choosing of electrical connection configurations

Pierpaolo Ricci, Joseba Lopez, Jon Plaza, Mattia Scuotto, José Luis Villate

Robotiker-Tecnalia

Luke Myers

University of Southampton

Jean-François Dhédin

EDF

Chris Retzler

Pelamis Wave Power

February 2009

Summary

This report provides comprehensive and general guidelines for the definition, design and selection of electrical connection configuration of marine energy converters.

Functional requirements for electrical connection are firstly outlined based on the different device designs and configurations and the main effects influencing connection configuration are subsequently described. Furthermore, general guidance on power quality requirements is given through a brief description of the principal criteria specified by most of the national grid codes and regulations. The example of the wind energy sector is considered to be crucial in the early stage development of marine energy farms, even though the current scale of offshore installations should not represent a major issue in terms of satisfying power quality specifications. It is assumed that future concepts will host on-board power converter and transformer to allow for efficient connection. The kind of conversion and control will be dependent on the generator type.

A range of options for different electrical connection configuration schemes is presented. Rated power and distance to shore are considered as fundamental variables to determine a suitable configuration. Depending on these inputs and on the device type, some elements might not be necessary but it is expected that future multi-megawatt arrays will require voltage elevation and reactive power control (or power conversion in case of DC transmission) to be performed offshore by means of purposely designed substations. The choice between AC and DC transmission will mainly depend on transmission length and power being the latter one probably economically suitable for very large installations placed at several tenths of kilometres from the coast.

Assessment of electrical configuration options should also focus on the technical and economical feasibility of the proposed solutions, particularly concerning the difficulty of offshore installation and maintenance operations. The example of the testing sites currently under development is useful but not really applicable to future large scale infrastructures. The structural design of offshore substations will probably be a major challenge for large scale wave and tidal farms and economies of scale will have to be sought to make purposely designed cables and connectors economically competitive.

CONTENTS

1 INTRODUCTION ..... 1—1
1.1 STATUS AND PERSPECTIVES OF MARINE ENERGY ..... 1—1
1.1.1 The challenges of marine energy ..... 1—1
1.1.2 The electrical connection of marine energy plants ..... 1—1
1.2 THE EQUIMAR PROJECT ..... 1—2
1.2.1 Structure of the project ..... 1—2
1.2.2 Work Package 5 - Deployment assessment: Performance of multi-megawatt device array ..... 1—3
1.3 OBJECTIVES A ND OVERVIEW OF THE REPORT ..... 1—3
1.3.1 Overview ..... 1—3
1.3.2 Objectives ..... 1—4

2 GENERAL REQUIREMENTS ..... 2—5
2.1 BASIC CONCEPTS ..... 2—5
2.1.1 Functional requirements ..... 2—5
2.1.2 Common ground ..... 2—5
2.1.3 Power quality ..... 2—7
2.1.4 Other factors ..... 2—8
2.2 GRID CONNECTION CODES ..... 2—8
2.2.1 Overview ..... 2—8
2.2.2 The experience of the wind energy sector ..... 2—9
2.2.3 Review of the national Grid Codes ..... 2—9
2.3 TECHNICAL ISSUES IN CONNECTION TO THE GRID ..... 2—12
2.3.1 Voltage and reactive power control ..... 2—12
2.3.2 Frequency control ..... 2—13
2.3.3 Fault ride –through capability ..... 2—14
2.4 ELECTRICAL CONNECTION FUNCTIONAL REQUIREMENTS ..... 2—16
2.4.1 Marine energy conversion technology ..... 2—16

3 ELECTRICAL CONFIGURATIONS SCHEMES ..... 3—17
3.1 INTRODUCTION ..... 3—17
3.2 ELEMENTS OF A CONFIGURATION ..... 3—17
3.2.1 General Outline ..... 3—17
3.2.2 Basic description ..... 3—18
3.3 AC TRANSMISSION ..... 3—21
3.3.1 HVAC transmission ..... 3—21
3.3.2 Possible configurations ..... 3—22
3.4 DC TRANSMISSION ..... 3—23
3.4.1 HVDC LCC ..... 3—23
3.4.2 HVDC VSC ..... 3—24
3.4.3 Possible configurations ..... 3—24

4 GRID CONNECTION INFRASTRUCTURES ..... 4—26
4.1 BACKGROUND: GRID-CONNECTED MARINE ENERGY INFRASTRUCTURES ..... 4—26
4.1.1 Marine energy open sea testing facilities ..... 4—26
4.2 ELEMENTS OF A GRID CONNECTION INFRASTRUCTURE ..... 4—29
4.2.1 Outline of the infrastructure ..... 4—29
4.2.2 Cable connectors ..... 4—29
4.2.3 Offshore substation ..... 4—31
4.2.4 Subsea Cable ..... 4—32

5 REFERENCES ..... 5—35

1 INTRODUCTION

1.1 STATUS AND PERSPECTIVES OF MARINE ENERGY

1.1.1 The challenges of marine energy

While engineers and inventors have long aspired to harness the sea as a vast power resource, it is only relatively recently that we have seen many years of engineering endeavour bring the dream very much closer to reality. Though the technical, commercial, social and political concerns need to be addressed, the global potential for offshore renewables is an opportunity that cannot be missed. Once the renewables industry breaks through the remaining technical milestones, it seems assured that marine renewables will follow where the wind industry is now advancing into the sea.

Nonetheless, the industry must work collaboratively to overcome the many technical and economic challenges of offshore renewables. The technical challenges are multidisciplinary, but developers often focus on the power capture element, rather than take a system-wide view. In particular, the power conversion and grid compliance issues tend to be disregarded until quite late in the day.

Offshore wind has developed from land-based solutions offshore by mounting most of the complex equipment out of the surf zone, including any sub-stations. The majority of the sensitive electrical equipment is usually located high up in the tower or in the nacelle, making it more robust in face of the harsher sea environment. Thus, the technology developed for onshore wind can be re-located out at sea.

The turbine and its power conversion technology is a complex package, but having been subjected to mass production, improvements in quality, reliability and cost-effectiveness will be carried forward by the industry as it moves offshore. Marine renewables don't have this history and, therefore, cannot easily make the gradual evolution to offshore deployment. Developing the concept and associated power conversion technology with the requirement to produce competitive generation costs and assure operational reliability is a tall order for such an embryonic industry.

The variable nature of wind and marine energy resources, and the extreme conditions, mean that both technologies face significant engineering challenges in integrating products into larger and more cost-effective farms. For example, offshore wind farms need to be larger in order to offset the higher installation and maintenance costs of the project with higher returns, but this in turn can expose the technology to more onerous connection conditions, incurring greater technical and financial risk should the power connection fail.

Some aspects of offshore wind technology have already transferred over to marine renewable developers. Some examples include subsea piling solutions, cable laying, blade technology and offshore access. The oil industry has also been a source of relevant transferable skills. Analysis and organisation of relevant results coming from references within and outside the marine energy sector has been subject of the Work Package 1 of the EquiMar project (see [1] and [2]).

1.1.2 The electrical connection of marine energy plants

Currently the size of the marine energy plants installed at the sea is practically negligible and very few developers have come to the stage of operating grid-connected devices. This means that the choice for electrical connection equipment and configuration has been often site-specific and particularly designed for the device considered. Moreover financial and economical factors have strongly imposed in some cases choices that would not appear feasible under the technical point of view for permanent installations.

The problem of the power transmission from and to offshore sites has indeed been already tackled by other industry sectors, such as offshore oil and gas extraction and offshore wind energy; many practical solutions have proven successful for these cases and might be considered for transfer to marine renewables, although different economical and cost drivers should be taken into account when evaluating their feasibility for ocean energy projects.

The example of offshore wind energy is particularly interesting because of its similar applications and functioning principles and will serve as principal guideline throughout this report. It has to be noticed, however, that the development of offshore wind energy plants at large distances from the shore has been proving to be profitable only for very large scale plants (with an installed capacity of several tenths of MW).

Ocean energy is yet far from deploying plants of comparable capacity and it is likely that the first wave and tidal power plants will be of limited size and placed at limited distance from the shore. Installed capacity will determine also the connection point on-shore as small-size installations will probably be required to connect to distributions grid rather than transmission lines. The choice of deployment location will involve therefore in the future also the account for existing electrical infrastructure onshore.

Although many technical problems are still to be solved, wave and tidal energies are expected to contribute for an important percentage to the future energy needs and within this frame most of the observers have planned a growth similar to that experienced by wind energy. At the moment no technology has proven yet to be effective and reliable over a long time and, since much of the challenges to be faced are common to many developers, many national and international organisations are attempting at tackling these issues under a collaborative approach between different institutions.

This holds for the case of the definition of the electrical connection configuration of future ocean energy farms which are likely to present common aspects between different sites and device types and might be analysed on a global view.

The work carried out during the preparation of this report was precisely part of a European project aimed at defining protocols for evaluation and assessment of marine energy systems.

1.2 THE EQUIMAR PROJECT

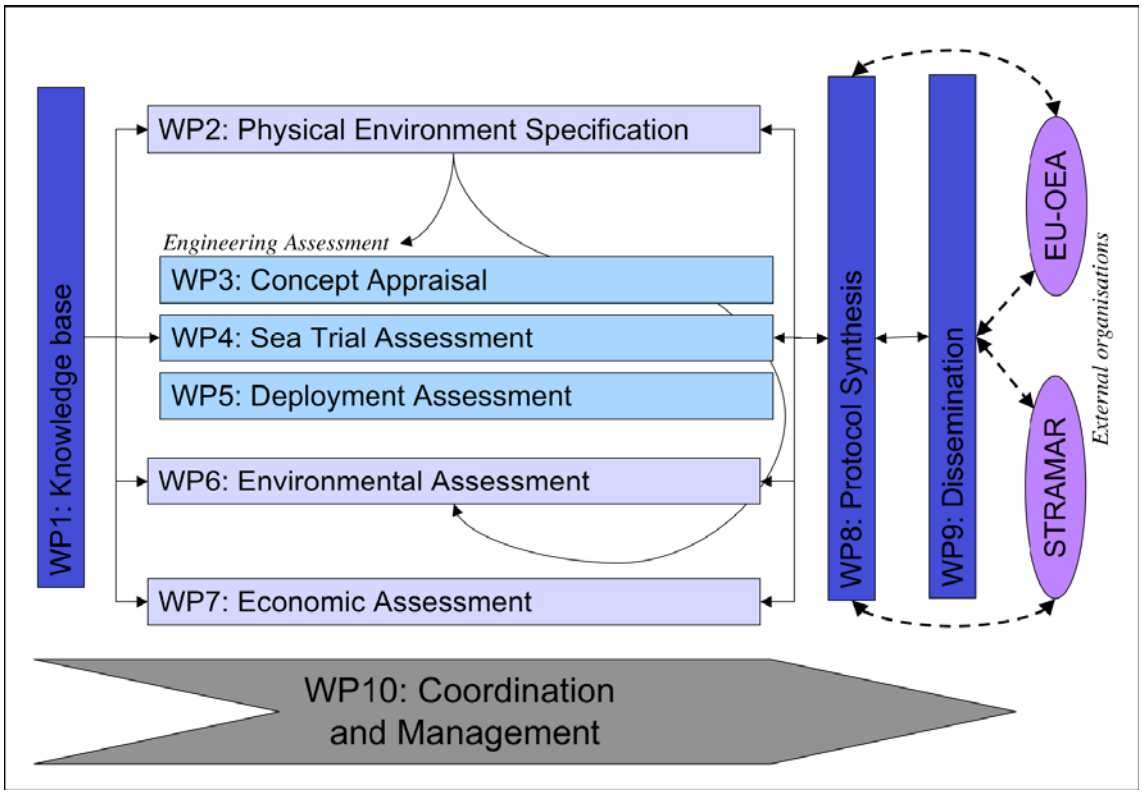

Figure 1.1 EquiMar project work package structure.

1.2.1 Structure of the project

The EquiMar project is funded by the European Commission as part of its 7th Framework programme under the Energy topic. It is a collaborative research and development project involving a consortium of 23 partners and will run for three years from the 15th of April 2008. A list of the partners involved is given below:

1. **The University of Edinburgh (UEDIN)**, United Kingdom
2. **Fundación Robotiker (TECNALIA-RBTK)**, Spain
3. **University of Strathclyde (UOS)**, United Kingdom
4. **Electricité de France SA (EDF SA)**, France
5. **EU Ocean Energy Association (EUOEA)**, Belgium
6. **University of Exeter (UNEXE),** United Kingdom
7. **University College Cork (UCC)**, Ireland
8. **Wave Energy Centre (WAVEC),** Portugal
9. **The University of Manchester (UniMAN),** United Kingdom
10. **Southampton University (SOTON),** United Kingdom
11. **Institut Français de recherche pour l'exploitation de la mer (IFREMER),** France
12. **Consiglio nazionale delle ricerche: Istituto di Scienze Marine (CNR-ISMAR),** Italy
13. **Det Norske Veritas (DNV),** Norway
14. **Teamwork Technology (TT),** The Netherlands
15. **Pelamis Wave Power Ltd (PWP),** United Kingdom
16. **European Marine Energy Centre (EMEC),** United Kingdom
17. **Wave Dragon (WD),** Denmark
18. **Uppsala University (UU),** Sweden

19. **Sea Mammal Research Unit (USTAN),** United Kingdom
20. **Scottish Association of Marine Sciences (SAMS),** United Kingdom
21. **Feisty Productions Ltd (FPL),** United Kingdom
22. **Aalborg University (AAU),** Denmark
23. **Actimar (ACTIMAR),** France

The aim of EquiMar is to deliver a suite of protocols for the equitable evaluation of marine energy converters (based on wave or tidal energy). These protocols will harmonise testing and evaluation procedures across the wide variety of devices presently available with the aim of accelerating adoption through technology matching and improved understanding of the environmental and economic impacts associated with the deployment of arrays of devices. EquiMar will assess devices through a suite of protocols covering site selection, device engineering design, the scaling up of designs, the deployment of arrays of devices, the environmental impact, in terms of both biological & coastal processes, and economic issues. The protocols will be developed through a robust, auditable process and disseminated to the wider community. Results from the EquiMar project will establish a sound base for future marine energy standards.

The activity within the project is structured through the definition of ten different Work Packages (including the project management), each one covering a specific part of the project with specific objectives. Six of them (WP2, WP3, WP4, WP5, WP6 and WP7) are mainly focused on technical issues, WP1 is intended to build a knowledge base for marine energy systems, WP8 will deal with the synthesis of the protocols and the organization of the documentation while WP9 will focus on dissemination of the project activity through the wider community. Finally WP10 will include all the coordination and management issues.

A scheme of the structure of the project is given in figure 1.1.

1.2.2 Work Package 5 - Deployment assessment: Performance of multi-megawatt device array

The focus of this work package is upon the deployment and performance issues of the first generation of wave farms and tidal stream arrays. The work is aimed at delivering protocols to provide guidance for developers – prior to deployment – on how to integrate their device designs into farms or arrays on a multi-megawatt scale and to standardize methods for assessing the performance of the arrays or farms as a whole. Variations in wave and tidal device designs will have a strong influence upon the first of these aims possibly leading to device-specific sites or array layout configurations. Performance of arrays can be broken down into specific areas such as installation, ease/requirement of maintenance as well as the ultimate unit cost of electricity generated.

The work is divided into different tasks:

1. Protocols for device classification and performance measurement for multi megawatt arrays or farms
2. Matching device design to the environment
3. Development of protocols for assessment of engineering robustness and system failure of arrays and farms
4. Guidance for configuration of electrical connection of arrays and farms
5. Supply chain and infrastructure
6. Ascertain impacts upon stakeholders

This report is the result of the work carried out within task 4.

1.3 OBJECTIVES A ND OVERVIEW OF THE REPORT

1.3.1 Overview

This report has been structured within different sections in order to cover different aspects of the electrical connection of wave and tidal energy farms. The report has been subdivided in three technical chapters:

- **General requirements:** This will include a general summary of the basic grid connection requirements in terms of power quality with a brief reference to local regulations and standards. It also outlines functional requirements of an electrical connection configuration
- **Electrical configuration schemes:** An analysis of the different options for the electrical connections of a marine energy farm to the grid. For large power transmission the available transmission types considered are essentially three: HVAC, HVDC LCC, HVDC VSC.
- **Grid connection infrastructures:** This covers a general analysis of the engineering and construction requirements for the component of a grid connection interface

1.3.2 Objectives

This guidance will:

a) Establish principal grid connection options for wave and tidal farms.

Grid connection options are dependent both on electrical and engineering requirements. The harshness of the sea environment and the high costs of installation limit the number and size of offshore structures delegated for collection and transformation of the electrical power output. Choice of different configurations depends also on the voltage levels and on the type of transmission line to coast. The deployment site will be therefore strongly influential on the decision of an electrical configuration. A trade-off between ease of maintenance and power transmission efficiency has to be achieved. With transformers and converters located onshore, maintenance would be easiest. For ocean energy installations far from the coast this would lead to unacceptable loss due to low voltage power transmission.

b) Provide guidance and methods for assessing the suitability of electrical connection configurations and their installation

Suitability has to be assessed based on efficiency and economical criteria. To estimate the costs related to grid connection infrastructure is complicated and an economical analysis should take into account a reliable forecasting of the power production of the farm. The size of the project would also have a strong impact on the decisions on a configuration design as installations at very large depths and distances from shore would probably require very high installed capacities to be profitable.

c) Develop guidance on the choice of offshore voltage and the use of substations. Establish power quality guidelines.

Higher voltage levels (tens of kV) require all power converters and transformers in the proximity of the converters. AC and DC cables are both viable options, the former being the usual choice because of simplicity. DC connection is chosen when power level is very high and/or distances to shore increase. The best choice will be site specific.

Guidance on power quality should be developed according to existing standards. Experience from large offshore wind plants should be beneficial as in many countries the Grid Code has been under modifications to take into account the impact of wind energy on the grid.

d) Develop examples of possible configurations and calculations of efficiency.

Some very simple schemes will be presented and evaluated through an approximate calculation of the efficiency of the transmission. Sophisticated models will have to be defined for more detailed results.

e) Promote equitable protocols and standards for electrical connection across marine renewables

Ensure that the various different forms of marine energy are treated equably in terms of the comparison of power quality and the ability to provide grid support where this is of importance. Also to encourage the standardisation of grid connection equipment requirements in order to promote the economic development of optimised electrical connection equipment that may be peculiar to the marine energy industry. Important examples of these are subsea transformers and wet or dry mate connectors.

2 GENERAL REQUIREMENTS

Marine energy generators must be electrically connected to the onshore grid system in order to make use of the energy generated. The marine environment both above and below the water surface poses particular challenges in terms of the harsh environmental conditions the connection equipment must withstand. In addition, access to the equipment for inspection, maintenance and repair will probably be weather-dependent and therefore sporadic and unpredictable. Access costs will be high due to the requirement for sea-going vessels and divers and/or submersible vehicles.

Alongside the environmental conditions, the electricity output of the marine energy installation, as for any other form of electricity generation, must meet the technical electrical system requirements of the electrical grid operator. Depending upon the form of the marine energy generator, this may require electrical conversion and control equipment. The location of this equipment must be carefully considered with regard to reliability and accessibility.

The challenges posed by the marine environment may be met by utilising equipment of a high standard of design and manufacture suited to the environment in which it is being operated. Such equipment is currently utilised in the oil and gas industry, but the manufacture and installation of this equipment is extremely costly, and best possible use must be made of it to ensure economic viability of the marine energy installation.

2.1 BASIC CONCEPTS

2.1.1 Functional requirements

The configuration of the marine energy electrical connection is selected to fulfil the following objectives:

A. Connect the offshore marine energy generators to the onshore electrical grid for transmission of the generated electrical power into the general grid system (export power). This may include the interconnection of an array of physically-spaced generators as in an offshore wind farm.

B. Where required, connect the offshore marine energy device to the onshore electrical grid for the supply of the marine energy device auxiliary electrical loads (import power).

C. Where required, connect the offshore marine energy device to the onshore electrical grid for the supply of electrical power to energise and start up the marine energy device (peak import power).

D. Ensure that all equipment is being operated within its voltage and current limits throughout the power range of the marine energy farm and over the range of operation of the grid.

E. Ensure that all equipment operates stably and predictably during individual generator start-up and during minor grid disturbances.

F. Ensure that the protection systems operate correctly, and safely isolate faulty equipment.

G. Ensure that any adverse effects of the marine energy generators on the electrical grid are remedied according to the local grid connection requirements.

H. Ensure that grid support is provided as defined by the local utility in their grid connection requirements.

I. Minimise energy losses in transmission of electrical energy back to shore.

J. Minimise the capital cost of the overall (onshore and offshore) connection to the grid.

K. Facilitate economic operation and maintenance of the marine energy farm in terms of isolation and access for maintenance and connection/disconnection of devices.

L. Maximise reliability of the grid connection.

M. Minimise down time of generators during routine operational procedures (e.g. device maintenance) and following failures of the electrical connection e.g. due to grid disturbances.

2.1.2 Common ground

There are a number of common issues for power quality and electrical transmission for offshore wind and marine renewables. Indeed, tidal generation probably has more in common with wind than wave technology due to the inherent nature of the power source, with some companies already moving across from wind to marine, as they attempt to move their technology below the surface. As with wind, the fluctuating power characteristics of wave and tidal power make power conversion and grid connection issues a real challenge for marine renewables. Wave power has a massive dynamic range, is subject to constant change and the output from power capture devices is usually oscillatory in nature, a function of the wave period. Tidal is more consistent and predictable, but still has a large dynamic range and operates from zero to maximum twice a day.

Marine technologies need to be robust and engineered to cope extremely well with the extreme conditions out at sea. Two reliability issues requiring special consideration are energy conversion and power transmission. To operate efficiently, traditional standard rotational electrical generators need a high frequency power input. To be able to use these standard generators, the low

frequency, high torque input generated from the marine resource requires an energy conversion intermediary, such as a gearbox. While this is fairly straightforward, the intermediary conversion must be interfaced with the mechanical power take-off technology in order to allow effective conversion of marine power into electricity. This power conversion process has intrinsic challenges associated with power loss, reliability and system complexity, all of which are multiplied by submersion metres below the sea and many miles from the nearest sub-station.

Marine technologies with fewer subsea systems will inevitably reduce the likelihood of maintenance and hence mitigate the high costs of working at sea or retrieving a device. Likewise, reducing the number of interconnections to a device is important in minimizing the risk of cable damage. Straightforward solutions such as removing heat losses by using passive cooling to the hull can avert some of the risks involved in using complicated heat exchangers and associated pumping systems.

Before selecting the grid connection configuration, the physical and electrical characteristics of the marine energy device along with the proposed farm site must be analysed. Although there are some similarities between the various marine energy devices currently being developed, there are also significant variations between them and also between marine energy devices and offshore wind. In particular the practical issues of the location and accessibility of electrical connection equipment have a significant effect on selection of configuration. Table 2.1 below summarises the important characteristics to consider when selecting the connection configuration.

Table 2.1 Characteristics affecting connection configuration

Item	Characteristic	MED – one extreme	MED – other extreme	Offshore Wind
1	Proximity to shore	Inshore/fixed to shore	10km or more offshore	Varies
2	Device Mobility	Fixed	Mobile/ removable	Fixed
3	Seabed and cable landing conditions	Sand	Rock	Varies
4	Individual device size	Up to and including 1MW	> 1MW	>1MW
5	Physical Spread of devices within an array	Single point	Spread over several square km	Spread
6	Location of Connection point to the device	At or inside dry enclosure	Subsea	Inside tower
7	Accessibility	Accessible or accessible with difficulty	Inaccessible while on site	Accessible (with some difficulty)
8	Water depth	Up to 20m	>20m	Shallow (up to 10m)
9	Proximity to strong grid system (transmission system)	Up to 50km	>50km	Varies
10	Smoothness of Electrical Power	Slowly varying with controlled output and possibly energy storage	Highly variable (direct conversion from wave to electricity)	Varies depending upon type of generator
11	Short-term control of Electrical power	Fully Controlled (energy storage and frequency/load control)	Uncontrolled	Varies depending upon type of generator
12	Control of voltage and power factor (generator related)	Controlled	Uncontrolled	Controlled
13	Short-circuit fault contribution (generator related)	Insignificant contribution	Significant contribution	Varies depending upon type of generator
14	Ability to remain connected during grid disturbance	Able to ride through (stay connected & recover from) grid voltage dips	Unable to ride through voltage dips	Varies depending upon the type of generator
15	Power duration curve	Usually generates at high power when generating	Rarely generates at high power	Power duration spectrum

2.1.3 Power quality

The electrical power system has to distribute electrical power with a high power quality: the power must be delivered with a fixed frequency and at a fixed voltage level and in a reliable way. With a limited number of large (thermal) power stations and a transmission and distributions system, this can be achieved rather well. These large power stations have well proven voltage control using reactive power variation and frequency control using active power variation. The power is then transmitted via high voltage transmission lines and distributed via medium and low voltage distribution systems with good protection systems. The protection systems are sized based on the power flow from the power stations via the transmission lines and the distribution system to the customers. With the increasing contribution of distributed generation (among which many are renewable sources), this becomes more difficult because these systems

- often do not vary reactive power and therefore do not contribute to voltage control (especially older systems);
- mostly deliver varying active power instead of controllable active power and therefore can disturb the frequency control and cause voltage variations, also due to varying losses in the lines;
- may disconnect in case of network faults, frequency or voltage disturbances, which may lead to important loss of generation and disturb the power balance further;
- may change the power flow direction in the distribution system if connected to the distribution system, and therefore impact on the protection system.

For wind energy, these aspects are being investigated, and several problems have been solved. Because of the similarities between wind and other energy sources, wave and tidal energy can profit from this knowledge. Power quality related problems due to ocean energy will be presented and listed.

A single ocean energy converter is likely to be connected to the distribution system close to shore. Such a single energy converter is not large enough to influence the voltage and frequency control of a large strong grid. However, there may be some local effects in the distribution system where the marine energy converter is connected, such as

- voltage variations;
- harmonics;
- flicker;
- behaviour during grid faults.
- ripple control signal attenuation.
- voltage step changes.

Power electronic converter produce harmonics, but state-of-the-art filtering will possibly keep these below a prescribed value. It has to be noticed that the most modern electronic converters (based on IGBT) produce harmonics at their PWM frequency and at some multiple frequencies of the commutation frequency. All these frequencies are between 2kHz and 9kHz. Some effects were detected on loads but studies have to be done in order to examine the question in detail.

If there is no energy buffer in the device, the power delivered to the grid can vary rapidly. This variation may be small in the case of tidal devices while it is expected to represent a major issue for single wave energy converters: with a frequency of around 0.2 Hz, twice the wave frequency, this could cause a variation of the voltage at the point of connection to the network. The magnitude of this variation depends on the strength of the grid; the weaker the grid, the larger the variations. These variations can be very disturbing for the other customers connected at this point. This problem could be solved in different ways:

- use a connection point with a strong grid (which may not be available),
- use an energy buffer in the device (which may be expensive or not feasible),
- use more than one energy converter so that the output smoothens (but only one prototype may be available).

If there is a fault in the network, the large short-circuit currents will activate the protection system and the faulty network section will be disconnected. Depending on the distance to the fault, this will be seen as a smaller or larger voltage dip. Marine energy converters with power electronics mostly can not significantly contribute to the fault currents to activate protection systems: they can not deliver more than the rated current. Wind turbines connected to the distribution system used to disconnect from the grid in case of large voltage dips.

However, with the increasing amount of wind power, disconnecting all wind turbines led to a considerable loss of generators feeding the fault (and thereby further lowering voltage). Therefore, new grid regulations nowadays require that wind turbines stay connected to the network for a specified time during faults (referred to as fault-ride-through capability). The same may be expected for marine power. For variable speed systems with a full converter between the generator and the grid, it is not a problem to stay connected. For variable speed systems with a doubly fed induction generator, special solutions might be necessary, comparable to the solutions developed for wind turbines.

Large numbers of ocean energy converters in ocean farms have to be connected to the grid via an offshore electrical infrastructure and at a suitable onshore connection point. Like offshore wind farms, large marine energy farms will hardly be connected to the distribution systems, but mostly to the high voltage transmission system. In that case, the existing protection system is suitable. Like wind farms, ocean energy farms will have to be operated as power plants. This means that they may have to contribute to voltage control by controlling reactive power generation and to frequency control by controlling active power generation. Most

ocean energy converters have variable speed generator systems, connected to the grid via power electronic converters. Some converters can control the reactive power flow, such as voltage source inverters. Other converters can not control the reactive power control or even deliver a varying reactive power, such as current source inverters. If converters are chosen that can control the reactive power, these converters can contribute to voltage control in the grid as long as the rating of these converters is large enough. Long subsea cables will limit, however, the capability of the offshore power station to provide these services and special measures may have to be taken at the point of common connection.

For frequency control, it is necessary that the active power can be controlled. Especially in systems without energy buffer, this is difficult, because they depend on the incoming renewable power. In a marine farm, it could be decided that the marine energy converters do not produce the maximum power they can extract so that the output power can be increased when the control requires that. However, as for wind farms, this method will keep the cost of energy artificially high and is less likely to be implemented in practice.

To be able to control the frequency of the grid even when there are important uncontrolled variations of the power delivered by a marine farm, it may be necessary to have a considerable amount of back-up power such as from thermal plants, other renewable sources or dedicated energy storage. This backup is also necessary during heavy storms when the systems are shut down to minimize the risk of damage.

2.1.4 Other factors

Other factors which are not device specific will also affect the electrical configuration of the marine energy farm. These factors, which are shown in Table 2.2, may change over time as the marine energy industry develops, but they will have a significant effect on decisions made at present.

Table 2.2 Characteristics affecting connection configuration

Item	Description	Examples	Considerations
1	Status of technology – especially that associated with the marine environment	DC link technology Subsea transformer, switchgear Dry-mate/wet-mate connectors	Is there a history of similar equipment/installations? How does the maintenance requirement balance with the accessibility? What is the reliability? Is it suitable for the environment in which it will be operated?
2	Cost of technology	Oil & gas industry costs	Existing subsea technology designed for deep water (1000m). Losses are unimportant in oil and gas industry. Need to adapt this technology to make it adequate for shallow water (up to 100m), high efficiency and far less costly.
3	Availability/cost of installation and maintenance support	Installation/support vessels Divers	Charter/hire of vessels very costly. Need to design to make installation/maintenance possible with lower specification of vessel e.g. without dynamic positioning. e.g. for cable laying, cable splicing, static cable trenching, installation of subsea electrical infrastructure

2.2 GRID CONNECTION CODES

2.2.1 Overview

A key challenge for both wind and marine renewables, with their intrinsically fluctuating power generation, are the Grid Codes and Distribution Codes for electrical transmission and distribution, which underpin the entire electrical network operation. These rules require electricity suppliers to match their device to the point of common coupling. Issues such as frequency stability, voltage, power factor, harmonics and fault level all need to be taken into account.

Managing the national grid requires accurate forecasting of both the consumer demand and the electricity generation. At present, small scale generators are exempt, but in the coming years, as the renewables industry moves well beyond the 100 MW benchmark, transmission and trading will grow more and more complex.

Ideally, for grid connection of any generation technology, a predictable, consistent power flow is needed. As a result, the stable and predictable qualities of the power curve generated from tidal and wind turbines potentially make them more grid-friendly. However, wave farms may use a range of methods to level the peaky power flow seen from an individual device ([3]).

A fundamental consideration, for both wind and marine technologies, is that the site of offshore electricity generation is dictated by the best locations for energy resource. However, the majority of these is far from the main load centres and often has only a weak distribution network available. Linking electricity generation in these remote areas to the local network can result in network problems and requires costly reinforcement and hence project costs may be prohibitive if deep reinforcement is deemed necessary.

Once marine renewables are ready to progress to full scale farms, identifying appropriate locations should be quite straightforward, given the fact that much research has already been done in terms of resource. And, it is likely that very large marine renewable farms will be built to take advantage of economy of scale and justify the construction of a common shore-based grid connection.

2.2.2 The experience of the wind energy sector

In the beginning of wind energy commercial development, wind turbines have been treated as embedded generators, and they were not expected to contribute to the control of power system voltage or frequency. In addition, wind farms were required to disconnect from the grid under abnormal operating conditions. Until recently, wind farms connected to the grid were small-sized installations, connected at distribution voltage levels and the total amount of wind power generation capacity was (and still is in most countries) small in proportion to the total amount of installed generation capacity.

Due to the constant increase of wind power grid-connected installations, the situation has been changing in countries like Denmark, Germany and Spain and the number of large capacity wind farms is expected to grow dramatically in the next years, particularly with respect to offshore plants.

With the objective of enabling wind generation to connect to the transmission system without unnecessary restrictions and at the same time ensuring the security of supply, different transmission system operators have to adapt their grid codes. Wind farms are no longer only considered as embedded generation but are more and more required to contribute to grid stabilisation and voltage and frequency control therefore new regulations are taking into account wind power integration in many countries.

Wave and tidal energy will probably benefit of this experience as many of the requirements defined for such cases are likely to hold for marine renewables.

2.2.3 Review of the national Grid Codes

Historically, the first generating plants exporting energy to the grid have been ruled by two kinds of regulation: those concerning local networks and those referred to the global network in its whole.

Local regulations, generally regarding voltage and current, are defined by Distribution Systems Operators (DSOs) through the issuing of Distribution Codes. Global regulations, focused on active and reactive power flow, are defined by Transmission systems Operators (TSOs) through Grid Codes.

The requirements imposed by these codes are generally different from one country to another. The growing interconnection between different national grids and the wind energy boom have recently enlightened about the future need of a standard base for grid connection common to all the European countries.

A report from the European Wind Energy Association ([4]) delivered in 2005 summarises the principal issues related to the connection to the grid of large wind farms. Table 2.3 shows a list of basic requirements imposed by national codes for wind energy. Such requirements have not yet been defined for marine energy because of the negligible impact of wave and tidal energy production on global electrical power supply but those defined for wind energy are likely to be applicable to future large scale marine energy plants.

Table 2.3 Basic requirements imposed for wind energy generation by Grid Codes

Active power control	Several GCs require active wind farm power control to secure frequency stability, avoid network overloading etc. The required extent of modulation of the power might change between the different GCs.
Frequency control	Frequency control within acceptable limits to secure supply, avoid overloading and comply with quality power standards.
Frequency range and voltage range	The requirement to be able to continue to operate even when the system is in difficulty, i.e. when voltage or frequency are far from the nominal values.
Voltage control	This implies requirements for reactive power compensation
Voltage quality (rapid changes, flickers, harmonics)	A whole set of different requirements is included in national codes
Tap changing transformers	Some Grid Codes (E.on Netz, ESBNG) require that wind farms are equipped with tap-changing grid transformer in order to be able to vary the voltage ratio between the wind farm and the grid in the case of need
Wind farm protection	This category of requirements is intended to cater for situations with occurrence of faults and disturbances in the network. A relay protection system should be present to act, for example, in cases of high short-circuit currents, under-voltages, over-

	voltages during and after a fault. This should ensure that the wind farm complies with requirements for normal network operation and supports the network during and after a fault. It should equally secure the wind farms against damage from impacts originating from faults in the network. The so-called fault ride-through (FRT) requirements fall under this category.
Wind farm modelling and verification	Some codes require wind farm owners/developers to provide models and system data, to enable the operator to investigate by simulations the interaction between the wind farm and the power system. They also require installation of monitoring equipment to verify the actual behaviour of the farm during faults, and to check the model.
Communication and remote control	Unlike the requirements above, national codes are quite unanimous on this point. The wind farm operator should provide signals corresponding to a number of parameters important for the system operator to enable proper operation of the power system (typically voltage, active and reactive power, operating status, wind speed and direction etc.). Moreover it must be possible to connect and disconnect the wind turbines externally (only Denmark and E.on).

Tables 2.4 and 2.5 summarise existing transmission and distribution codes for several European countries. Grid connected power generating marine energy devices will be required to comply with these regulations.

Table 2.4 Codes for connection to transmission level

Country	Document ref.	Title	Year	Scope
Austria	TOR	Technische und organisatorische Regeln für Betreiber und Benutzer von Netzen	E-Control 2004	GC for transmission and distribution
Belgium	Royal Decree 19/12/2002	Koninklijk besluit houdende een technisch reglement voor het beheer van het transmissienet van elektriciteit en de toegang ertoe	Staatsblad, 2002	Transmission code
	ELIA doc. Interno	Voorschriften en uit te wisselen informatie voor de aansluiting van productie-eenheden	ELIA, 2004	Wind energy connected to transmission level
Denmark	TF 3.2.5	Wind turbines connected to grids with voltages above 100 kV	Energinet, 2005 (Eltra & Elkraft)	Wind energy connected to transmission network
France	Arrêté du 23 avril 2008	Prescriptions techniques de conception et de fonctionnement pour le raccordement au réseau public de transport d'électricité d'une installation de production d'énergie électrique		Transmission
		Référentiel technique de RTE	RTE 07/15/2006	
Germany	Transmission Code 2003	Netz- und Systemregeln der deutschen Übertragungsnetzbetreiber	VDN, 2003	Transmission code
	VDN Richtlinie	EEG Erzeugungsanlagen am Hoch- und Höchstspannungsnetz	VDN, 2004	Connection of renewable energy auto-production to the high voltage level
Greece	Transimission Code 30/5/2001	Transmission System Operation Code	HTSO	Transmission code
Ireland	Grid Code	Grid Code, Versión 1.1	ESB National Grid, 2002	Transmission code
Italy	CEI 11-32	Impianti di produzione di energia elettrica connessi a sistemi di III categoria	Comitato Elettrotecnico Italiano	Connection of generators to HV
Netherlands	Grid Code	Netcode	DTE 2005	Grid Code for transmission and distribution
Norway	Guideline for wind farms >10MW (con	guideline for wind farms >10MW (disponible en www.statnett.no)	Stattnet	Connection of wind turbines

	apoyo de SINTEF)			
Poland		Instruction of Transmission System Operation and Maintenance		
Portugal		Regulamento do Acesso às Redes e às Interligações	Entidade Reguladora do Sector Eléctrico (ERSE), 2001	Transmission and distribution code
Spain	P.O.12.1	P.O.12.1 Solicitudes de acceso para la conexión de nuevas instalaciones a la red de transporte. P.O.12.2 Instalaciones conectadas a la red de transporte: requisitos mínimos de diseño, equipamiento, funcionamiento y seguridad y puesta en servicio. P.O.12.3 Requisitos de respuesta frente a huecos de tensión de las instalaciones eólicas	REE	Transmission code
Sweden	SvK	Affärsverket Svenska Kraftnäts föreskrifter om driftsäkkerhetsteknisk utformning av produktionsanläggningar	Svenska Kraftnät 2002	Decentralized generation connected to transmission level
United Kingdom	Engineering Recommendation G75/1	Recommendations for the connection of embedded generating plant to Public distribution systems above 20kV or with outputs over 5MW	Electricity Networks Association 2002	Embedded generation (large systems)

Table 2.5 Codes for connection to distribution level

Country	Document ref.	Title	Year	Scope
Austria	TOR	Technische und organisatorische Regeln für Betreiber und Benutzer von Netzen	E-Control 2004	Transmission and distribution code
Belgium	Lastenboek C10/11	Technische aansluitingsvoorschriften voor gedecen-traliseerde productie-installaties die in parallel werken met het distributienet	BFE 2004	Decentralized generation connected to distribution level
Denmark	TF 3.2.6	Wind turbines connected to grids with voltages below 100 kV	Energinet, 2004 (Eltra & Elkraft)	Wind connected to distribution level
France	Arrêté du 23 avril 2008	Prescriptions techniques de conception et de fonctionnement pour le raccordement à un réseau public de distribution d'électricité en basse tension ou en moyenne tension d'une installation de production d'énergie électrique		Distribution code
		Le référentiel technique	EDF Reseau Distribution	
	Arrêté du 17 mars 2003	Arrêté du 17 mars 2003 relatif aux prescriptions techniques de conception et de fonctionnement pour le raccordement à un réseau public de distribution d'une installation de production d'énergie électrique	Journal officiel de la République Française	Grid connection of production units to distribution level
Germany	Distribution Code 2003	Regeln für den Zugang zu Verteilungsnetzen	VDN, 2003	Distribution code
	Technische Richtlinie	Parallelbetrieb von Eigenerzeugungsanlagen mit dem Mittelspannungsnetz des EVU	VDEW, 1999	Connection of distributed generation to low and medium voltage level
Greece	Distribution Directive 129	Interconnection of power stations to the distribution gris	PPC	Connection of distributed generation to the low and medium voltage level
Italy	CEI 11-20	Impianti di produzione di energia elettrica e gruppi di continuità collegati a reti di I e II categoria	Comitato Elettrotecnico Italiano	Connection of distributed generation to the low and medium voltage level

Netherlands	Grid Code	Netcode	DTE 2005	Transmission and distribution code
Norway	TR A5329-EBL-K 17-2001	Retningslinjer for nettilkobling av vindkraftverk	J.O. Tande, Sintef 2001	Connection of wind turbines
Poland		Instruction of Transmission System Operation and Maintenance		
Portugal		Regulamento do Acesso às Redes e às Interligações	Entidade Reguladora do Sector Eléctrico (ERSE), 2001	GC Transmission and distribution
Spain	RD 436/2004 OM 5/9/1985	Real Decreto 436/2004, de 12 de marzo, por el que se establece la metodología para la actualización y sistematización del régimen jurídico y económico de la actividad de producción de energía eléctrica en régimen especial	MITYC	Distribution code
Sweden	AMP	Anslutning av mindre produktionsanläggningar till elnätet	Svensk Energi 2001	Distribution code
United Kingdom	Engineering Recommendation G59/1	Recommendations for the connection of embedded generating plant to Public Electricity Suppliers distribution systems	Electricity Networks Association 1991	Embedded distributed generation (small systems)

2.3 TECHNICAL ISSUES IN CONNECTION TO THE GRID

Large scale marine energy farms installed to maximize energy output will probably have major limitations in terms of:

1. Voltage and reactive power control
2. Frequency control
3. Fault ride-through capabilities

These are the three main points that new grid codes are adapting for wind farm connection. The most worrying problem to face would be a voltage dip in the grid. The effects of transient faults may propagate over large geographical areas and the disconnection of marine energy farms under fault conditions could pose a serious threat to network security and security of supply because a great amount of wind power could be disconnected simultaneously.

2.3.1 Voltage and reactive power control

Under a simplified approach (see [5]) it could be shown that the magnitude of the voltage is controlled by the reactive power exchange, whereas the phase difference between sending and receiving end is dictated by the active power. The active and reactive power flow between the generation and the load in the power system must be balanced in order to avoid large voltage and frequency excursions.

Voltage regulation and reactive power control are fundamentals in the distribution of electric energy. A mismatch between the supply and demand of reactive power results in a change in the system voltage: if the supply of lagging reactive power is less than the demand, a decrease in the system voltage results; conversely, if the supply of lagging reactive power exceeds the demand, an increase in system voltage results.

Voltage or reactive power requirements in the grid codes are usually specified with a limiting curve such as that shown in fig.2.1.

The mean value of the reactive power over several seconds should stay within the limits of the curve. When the generating unit is providing low active power the power factor may deviate from unity because it can support additional leading or lagging currents due to the reactive power demanded by the utility. When the generating unit is working under nominal conditions, the power factor must be kept close to unity or else there will be excessive currents.

Future marine energy farms should have the capability to control the voltage and/or the reactive power at the connection point. Several methods for voltage control have been adopted in wind energy technologies ([6], [7] and [8]) and might be considered for application to marine energy.

Other specifications for marine energy converters might involve the quality of supply, including abrupt variations of the voltage level, *flickers* (low frequency perturbations of the voltage) and harmonics (high frequency perturbations of voltage and intensity values typically integer multiples of the transmission frequency).

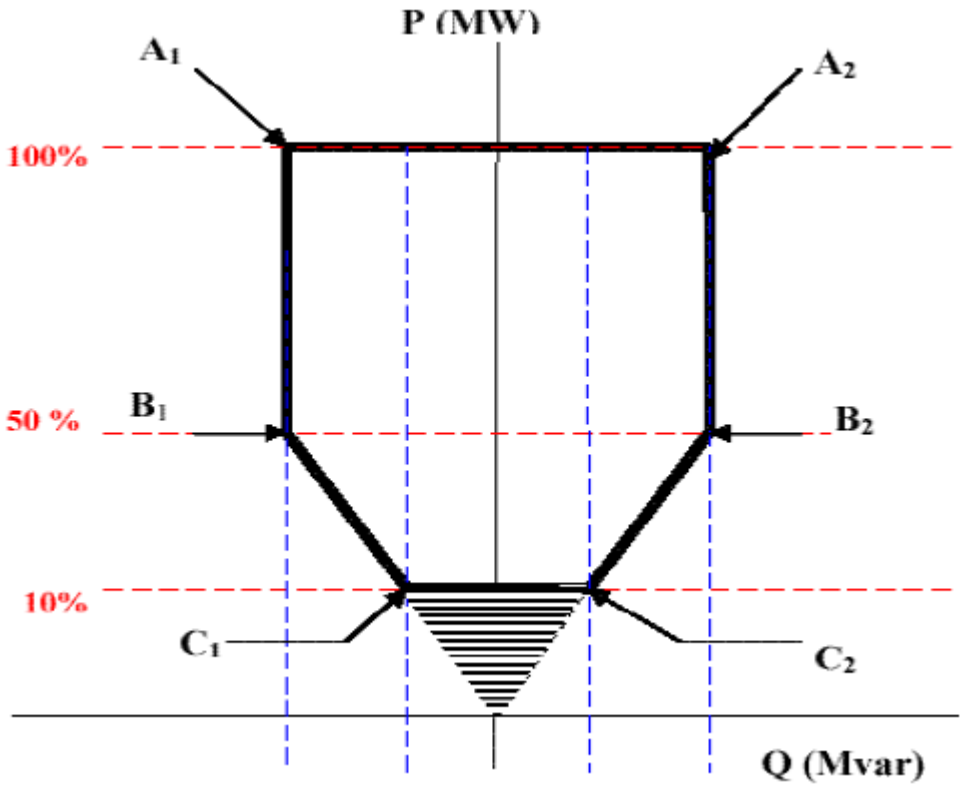

Fig.2.1 Typical limiting curve for reactive power ([8])

2.3.2 Frequency control

The frequency of a network is an indicator of the balance between power production and consumption. Power sources in the grid are usually rotating machines (although many wave energy converters make use of linear generators for their conversion system) and the active power output of the generators is determined by the mechanical power input from their prime movers (steam turbines, hydro, wind etc.).

The consequence of a mismatch between the supply (generation) and demand (load and network losses) for active power is a change in the kinetic energy stored in the moving mass of the generators, and hence, a drift in the system frequency.

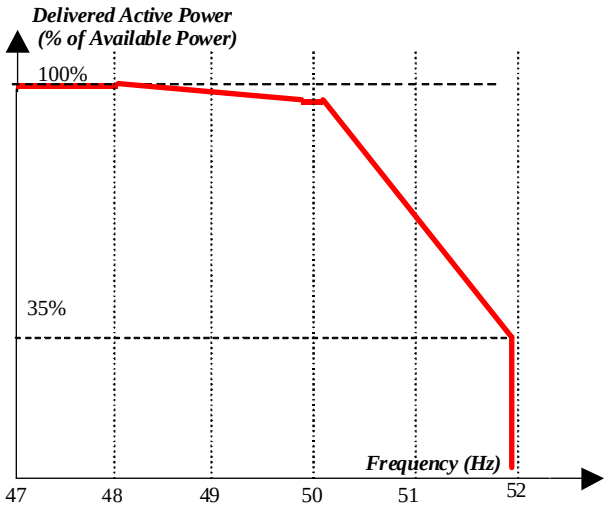

Figure 2.2 Typical frequency controlled regulation of active power ([5])

Grid management usually considers an operating reserve dimensioned to cover the loss of the largest generating unit of the system. Distinction can be made between spinning reserve (i.e. the difference between the total on-line generator capacity and the total output of the generators) and supplementary reserve (the amount of generating capacity that can be brought into operation within a limited time).

All the generating equipment in an electric system is designed to operate within very strict frequency margins. Grid codes specify that all generating plants should be able to operate continuously within a frequency range around the nominal frequency of the grid, usually between 49.5 and 50.5 Hz. Operations outside these limits would damage the generating plants.

Grid codes usually specify limiting curves for frequency controlled regulation of the active power. An example is shown in figure 2.2.

The future implantation of large scale marine energy farms might suggest modifications on national Grid Codes as it has been happening in the last years for wind energy. Some of these codes require for wind farms the participation to the frequency control of the network through variation of the active power output. However, as for wind turbines, wave and tidal converters are not able to provide the same control guaranteed by conventional power plants.

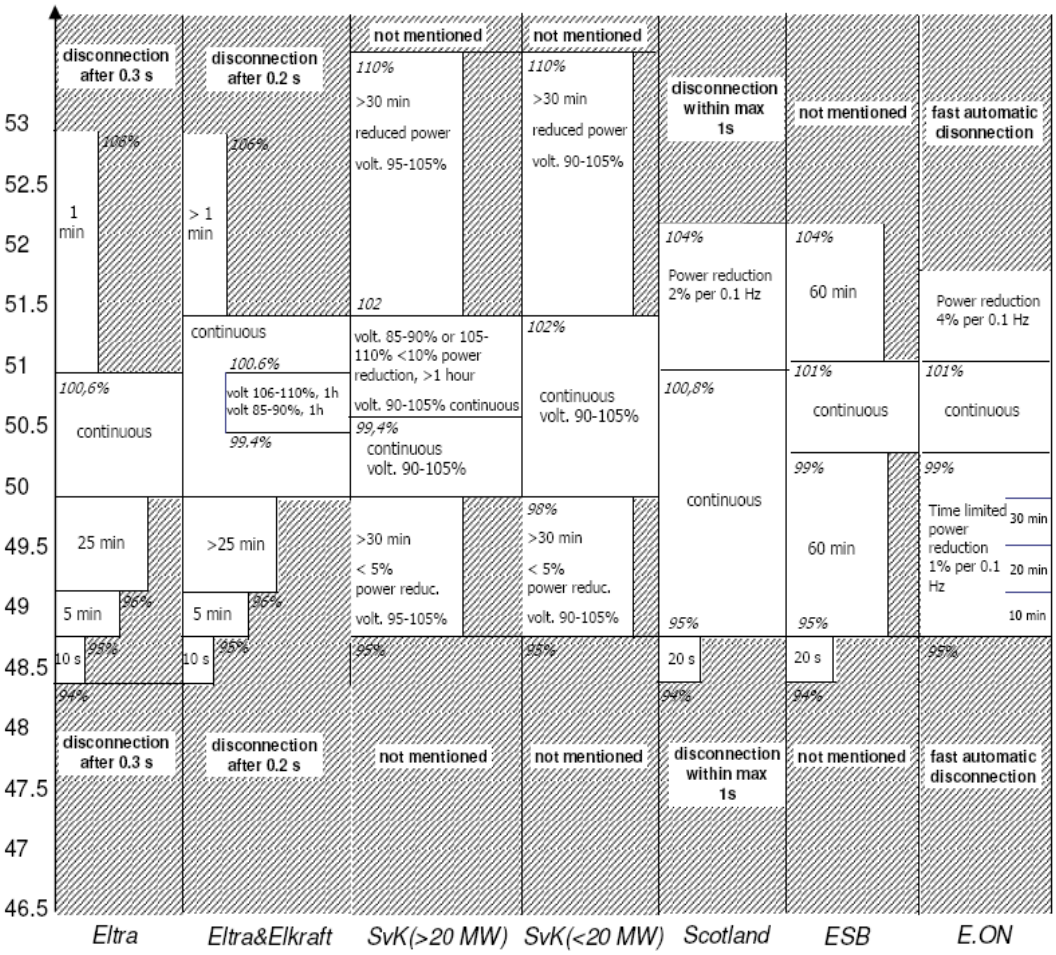

Figure 2.3 Summary of frequency control requirements imposed by national grid codes

While for high-frequency control it would be sufficient to disconnect a number of units, the low-frequency control would be possible only if the farm would be operating at a lower capacity than the corresponding to normal conditions. Some additional power control strategies have been indeed defined in the last years for wind energy ([9] and [4]) and contemplate the possibility of using a percentage of the active power capacity for reserve. That might be economically profitable if the pay for low-frequency response could compensate the loss of generated power.

Other requirements for frequency control could include limitations on the positive and negative changes of active power output to avoid frequency fluctuations on the network (ramp rates). Figure 2.3 shows a resume of the frequency control requirements imposed to wind turbines by several national grid codes.

2.3.3 Fault ride –through capability

When a short circuit takes place in some location in the grid, the voltage on the faulted phases will be zero. Due to the low impedance of transmission circuits a large voltage depression would be experienced across large areas on the transmission system until the fault is cleared by the opening of circuit-breakers.

Older grid codes required the disconnection of wind turbines during such faults but, with the increasing relevance of wind power production, these regulations had to be changed since the contemporary disconnection of many generators within the system would cause an additional loss to the one determined by the fault and could determine a frequency drop and even a black-out.

For these reasons nowadays in many countries (Denmark, Ireland, Spain and France) with a relevant penetration of wind power into the grid, wind farms are required to have a fault ride-through capability for faults on the transmission system. Typical requirement for this case are described by a plot of the voltage against the time that specifies the area of the "voltage dip" that the installation must bear (fig. 2.4). During the period of maintenance of the fault and the subsequent voltage recovery, no reactive power should be consumed by the plant at the connection point and the installation should contribute to the grid with a current intensity as high as possible (fig. 2.5). In France, wind farms (nominal power above 5 MW) connected to distribution network (under 50 kV) are also required to have fault ride through capability.

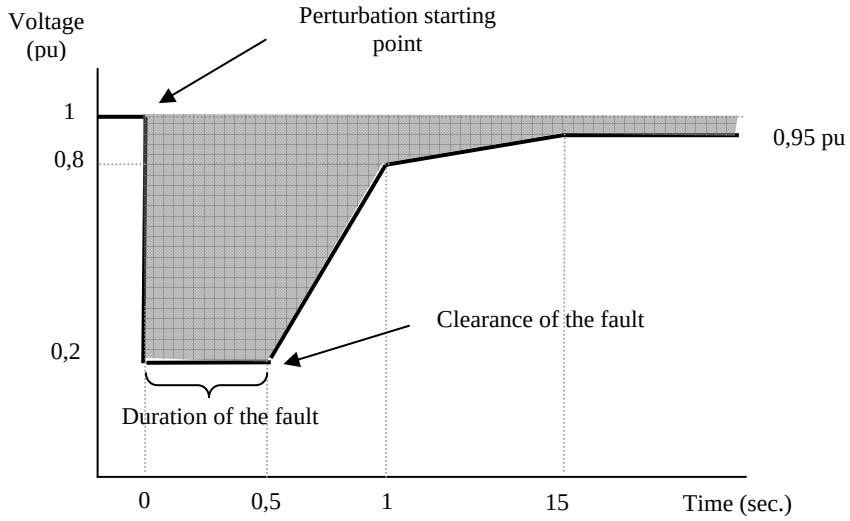

Figure 2.4 Curve of the voltage in function of the time at the connection point, defining the "voltage dip" area

Being still at a pre-commercial stage, marine energy technology will not probably be quantitatively relevant in terms of percentage of global electrical power output into the grid before a decade and therefore it is expectable that wave and tidal energy converters will be required to disconnect in case of faults in the early years. Large scale farms will likely require similar adaptation of the grid codes as it is happening for wind energy.

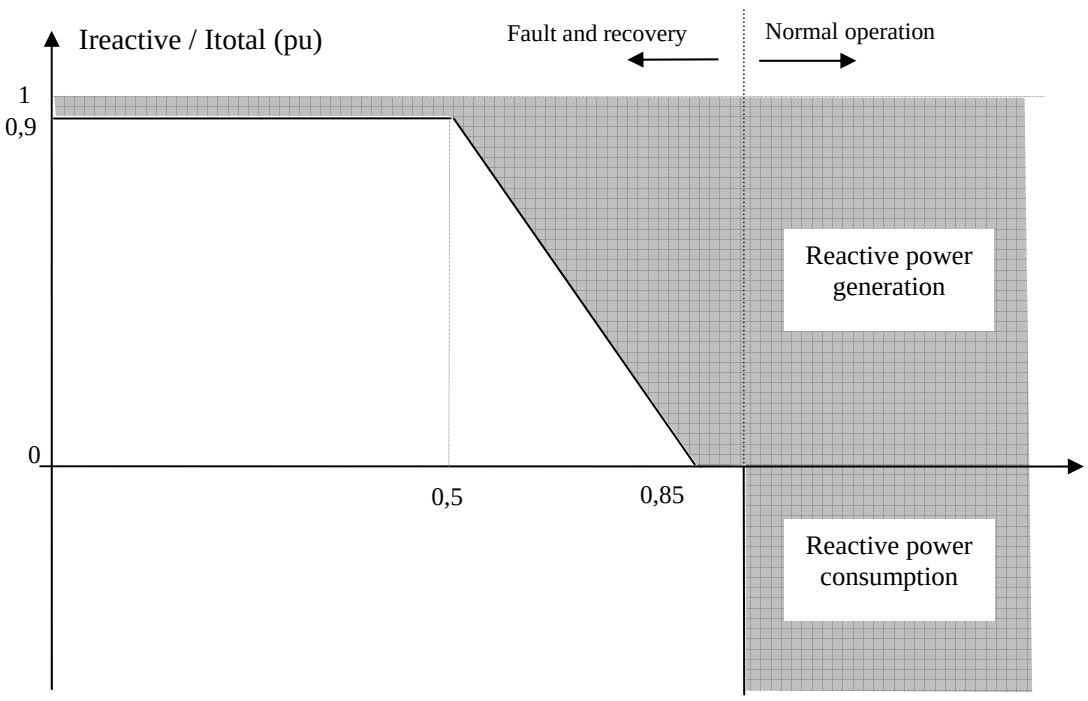

Figure 2.5 Operational area (in gray) during fault and recovery periods in function of the voltage at the connection point

2.4 ELECTRICAL CONNECTION FUNCTIONAL REQUIREMENTS

2.4.1 Marine energy conversion technology

Wave and tidal energy devices currently make use of a very wide range of technologies for primary energy conversion but all of the concepts aiming at generating electricity must include an electrical generator in the design, generally driven by an intermediate mover but in some cases directly driven by the motion of the device itself.

The majority of wave energy converters at an advanced stage have been considering hydraulic systems for energy conversion. The motion of the device is in this case transferred to a hydraulic motor which runs a conventional rotary generator. The Pelamis, for example ([10]), runs a hydraulic motor coupled with an asynchronous generator running at 1500 rounds-per-minute. Other technologies, mainly heaving point-absorbers, convert the power through directly driven linear generators, translating at a variable velocity and generating therefore output at variable voltage and frequency. Tidal devices, especially horizontal axis turbines, present more similarities with wind turbines conversion mechanism, with a gearbox interfacing between the shaft and the rotor of an electrical generator.

Utility power grids are 3-phase AC. Therefore, almost all generators used in Power Plants are 3-phase AC. Large Power Plants (hundreds of MW) uses invariably fixed-speed Synchronous Generators. In Distributed Power Generation, a power plant usually consists of a limited number of small units (up to a few MW) that may have induction generators. Efficient exploitation of renewable energy sources, such as marine renewables, demands variable-speed electric generators. Since voltage frequency is not constant in these machines, a Power-Electronics AC/DC-DC/AC Converter is required. The frequency on the grid side can be kept constant while on the generator side can be varied according to the needs of system dynamics. The machine-converter system is usually referred to as *Electric Drive*.

Besides device concept, some parameters to be taken anyhow into account are:

- cost and efficiency
- weight and volume
- maintenance requirements
- reliability

The choice of the type of generator would influence the level of power electronics required as well as the type of grid connection interface and control. A brief summary of the existing technologies applicable to marine energy devices is given below:

- **Synchronous Machine**: the field source is provided by DC electromagnets, usually located on the rotor. Current in field coils can be adjusted to load, so that the Power Factor can be kept low or within prescribed values. An external electric power source is needed to feed rotating DC coils.
- **Permanent Magnet Synchronous Machine**: instead of electromagnets, rare-earth (usually NdFeB) permanent magnets are implemented. In machines rated up to a few MW, PMs allow for remarkable improvements in terms of power density and design/manufacturing simplicity (no DC power source required).
- **Variable Reluctance Synchronous Machines**: magnets are replaced by toothed-iron in the rotor, magnetised by armature windings field. Cheap, simple design and remarkably low power density. Variable-speed Synchronous Machines do require full-rated (MVA) power converters.
- **Induction Generators**: there is no autonomous field source. Rotor circuits hold low-frequency AC currents induced by armature field in the stator. No-load voltage is therefore zero and the Power Factor is always lower than unity. Air-gap length is determinant for performance (the smaller the better). Squirrel-Cage machines have solid bars of conducting material, Rotor-Wound have wires.
- **Doubly-Fed Induction Generators**: the frequency of the rotor currents is controlled by a power converter. Since the converter is rated only a fraction of maximum machine power capability, it represents a very convenient solution for application where the speed is varied within limits (say, 30%) of the rated value.

Induction Machines are cheap and reliable, but encumbrance and efficiency may make them unfit for certain applications. Low-speed Direct Drive energy conversion, for example, requires generators with torque/force density as high as possible. This is the case of Linear Generators for Wave Power, where the speed rarely exceeds 1-2 m/s. Literature recommends PM technology for this class of electric machines.

3 ELECTRICAL CONFIGURATIONS SCHEMES

3.1 INTRODUCTION

Since only a few marine energy devices have been operating while connected to the grid and always for limited time and at a small scale, the problem of properly designed electrical configuration equipment and infrastructure has not yet drawn much attention among the marine energy community of researchers and developers.

Ongoing projects mostly concern single ocean converters to be deployed at short distance from shore and are principally aimed at demonstrating the technology rather than maximising the power transmission. Deployments sites have been often chosen mainly for practical and economical reasons, depending on the location of suitable grid connection points at the coastline and the requirement for additional electrical infrastructure was minimal to avoid additional costs. The limited distance to shore allows a reasonably efficient power transmission at low or medium voltage and for this reason some devices have been actually working without carrying any kind of power converter.

As the sizes of offshore farms increase, so does the need for higher voltage transmission. Presently, marine prototypes are connecting at 11 kV and in most cases less than 6.6 kV, since lower voltage levels greatly reduce the issues of insulation and subsea connection. Transmission of offshore power could be achieved using High Voltage Direct Current (HVDC), but this is only economic for very large-scale farms transmitting over long distances. However, this could become more viable in the future when new silicon devices become more readily available.

An increase in interconnections may mitigate the intermittent effects of wind and marine resources by enabling larger power flows between countries. High Voltage Direct Current (HVDC) could also be used to collect the energy from larger farms, which are anticipated to be located very far offshore. To ensure a more effective relationship between offshore renewables and the grid network, it is likely that subsea or offshore substations will be needed for the larger farms to marshal and collect the generator's power before transmission to the shore and the wider electrical network. In the case of multiple synchronous generators, these sub-stations would collect the AC power at various frequencies, convert it to a common grid-frequency, raise the voltage and transmit it to the shore.

Electrical cable connection is a key issue particularly for wave devices where the power take off is subject to tidal lift and fall, or where the device needs to re-orient itself to capture the tidal flow or the waves' energy. In these cases, flexible cables are required. These issues have, to some degree, been solved for oil and gas applications but their applicability to wave energy is limited by the higher power and voltage ranges required there. Besides, ensuring cable reliability remains an area of concern. It is not yet clear if generic or standardized electrical connection techniques can be developed for all marine renewable technologies but future economies of scale can be expected to reduce the impact of these components on the global cost of the installation.

3.2 ELEMENTS OF A CONFIGURATION

3.2.1 General Outline

Considering the grid connection of a marine energy farm, there are a number of different electrical configuration schemes that might be taken into account. In figure 3.1 we can see a basic representation of the connection of an offshore marine farm:

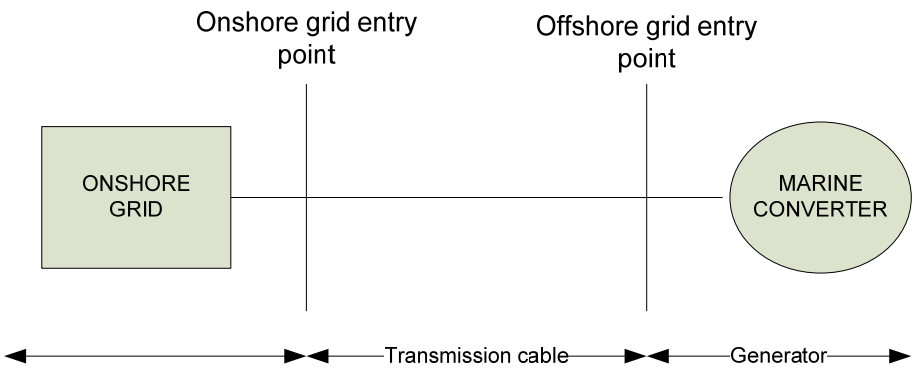

Figure 3.1 Basic representation of a grid connection scheme for a marine energy converter

This scheme is rather general and clearly applicable to offshore farms of any kind (tidal and wave) and includes a device located at a distant location from the coast, a transmission line extended along this distance and a point located onshore (likely a substation) that represent the connection to the grid (transmission or distribution network).

From a theoretical point of view any marine energy device might be directly connected to the grid without any additional element, assuming that a proper power converter is installed on board. However, for efficiency and economical reasons, it is likely that power produced by arrays of converters will be collected and transformed before transmitting it across the sea. This can be achieved in several ways and through several possible configurations that will be introduced below.

A first distinction should be made based on the type of power transmission between offshore and onshore locations.

Electrical energy can be transported by alternating current (AC) or direct current (DC): for offshore plants the choice of whether to use a DC or AC transmission line is mainly determined by the distance to shore and the installed capacity ([11]). For projects located far from the grid connection point, or of several hundred megawatts in capacity, AC transmission becomes costly or impossible, due to cable-generated reactive power using up much of the transmission capacity. In such cases, high voltage DC (HVDC) transmission is becoming an option. Such a system requires an AC/DC converter station both offshore and onshore; both stations are large installations whose building and operation might impose a number of engineering and economical challenges.

3.2.2 Basic description

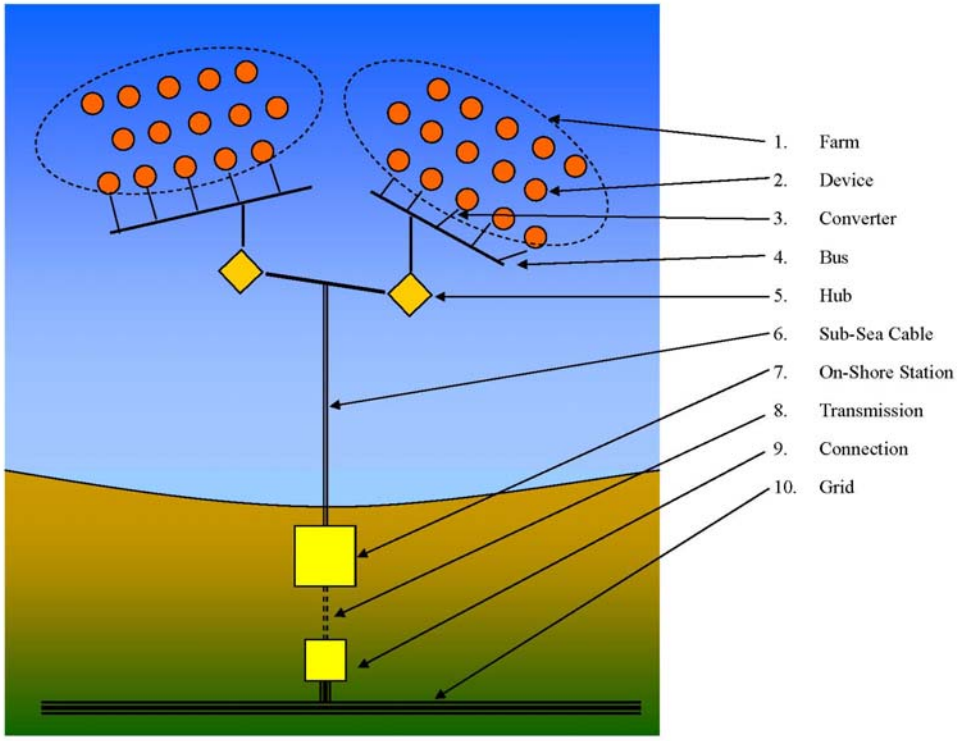

Figure 3.2 Scheme of the elements of a marine energy farm connection interface

Before introducing in some details different available options for electrical connection of marine energy farms, we briefly summarise the function and requirements of each element present in the scheme and its impact on the choice of an appropriate configuration. The following represents a list of all the parameter that would influence the selection.

- **Farm**
  - *Define farm rated power output and annual energy yield (local climate)*

    One of the most important requirements for an appropriate design of the electrical configuration is the definition of the capacity of the farm to be installed. It is assumed that the deployment site has been already determined in such a way that precise estimations of the annual average power output and of capacity and availability factors are available and reliable.

- *Define distance to shore*

  The second basic requirement is the distance to shore of the proposed marine energy farm. Since the choice of the location is strongly influenced by the available energy resource at a site, this parameter should not be an option but should rather be consequence of initial site selection. Wave energy is consistently larger offshore than onshore therefore it is expectable that future large scale wave farms will be located at several kilometres from the coast. Tidal energy might present different needs since some favourable sites from the point of view of the resource are placed at limited distances.

- **Device**

  - *Device type: farm control scheme may require bi-directional power flow*

    Some kind of converters (particularly wave energy devices) might require power supply at some point of the cycle for control and maximisation of the power output. Although this could be achieved in many cases through proper design of the conversion mechanism (e.g. using storage elements such as hydraulic accumulators [12]) a bi-directional power flow may be necessary for direct driven technologies. This would influence the design of the connection and of the power converter.

  - *Choose device rated power and voltage level*

    Rated power is important for converter design and umbilical cable definition. Voltage level would likely depend also on connection choices. Generators installed on marine energy devices will probably generate at a low voltage (e.g. 400 or 690 V) but the output voltage could be much higher if a converter and a transformer are installed on board. Generally a higher voltage level is preferable if the busbar is placed at long distances

  - *Safety equipment*

    As generally unmanned structures, marine energy devices should not require high safety levels. Early prototypes, especially in small size installations and in case of absence of offshore substations, might include switchgear equipment on board to allow isolation of the single line. It should be noticed, however, that in large size offshore wind farms, wind turbines are generally switched on and off in banks since protection mechanisms are provided at the cable termination to the substation. In some cases (see Horns Rev [13]) faulty rows can be separated through motor operated disconnectors placed on the first turbine. This might hold also for marine energy in case of multi-megawatt arrays although impact on the whole line of possible faults should be assessed.

  - *PLC and remote control (SCADA)*

    Control and monitoring of the plant could be required at the level of the single device. Remotely controlled disconnection should be provided at least at the first device on a line. Monitoring would also be important for operation and maintenance and a Supervisory Control And Data Collection System (SCADA-system) will probably necessary for minimisation of O&M costs. Transmission of information would require optical fibre lines within the cables.

  - *Power Converter (device):*

    - *Full, partly or not hosted on board*

      Power conversion is required at some stage for connection to the grid since, as it has been mentioned before, power quality requirements have to be satisfied. Modern power electronics is capable of treating large amount of power signals within a limited space and cost. Future large scale marine farms would likely include collection of power flows at a busbar and for such cases power conversion should be performed, at least partially, on board of the single devices. Transmission of rough power output from the generator is feasible only for small demonstration installation close to shoreline and next generation marine energy converters will probably have to include a full power converter (including transformer) on board as it works currently for wind turbines.

    - *AC/DC converter: type? (PWM, almost invariably)*

      The selection of the proper type of converter is influenced by the choice of the type of transmission and voltage level. Early plants adopt AC transmission and include converter and transformer on-board to elevate the voltage up to 11 kV. Efficient AC power supply would be controlled through Pulse-Width-Modulation (PWM) with a three-phase bridge rectifier connected to the three-phase generator, a dc link with a filter and the subsequent three-phase inverter bridge. Conversion to DC with a rectifier and a filter connected to the generation might be an option if several units are to be connected to a bus and voltage transformation can be operated at an outside substation.

- *Umbilical cable*
  - *Fix or mobile end*

    The choice of the umbilical cable will basically depend on the rated power output and on the chosen voltage level. Umbilical components might withstand demanding dynamic loads and generally require limited bending curvatures during operation. Small conductor cross-sections are preferable so the choice of a low transmission voltage from the device should be assessed against the selection of a proper umbilical cable since, assuming the same power carrying capacity, higher voltage might allow adoption of a smaller section (because currents would be lower). Umbilical lay-out should be carefully planned particularly for wave energy devices. For such cases one could think on the possibility of designing a mobile end through the laying of a secondary dynamic cable directly linking to the bus or substation (for instance see Bimep installation [14])

- **Electrical connector (required if the device has to be disconnected for maintenance)**

  Disconnection and displacement of the device for onshore maintenance might be required for floating technologies. In such cases the option of an intermediate electrical connector between the umbilical and a secondary dynamic cable to the substation might be feasible. The problem is that there are very few examples of commercial components designed for this aim, particularly if considering voltage and power ranges normally applicable to marine energy technologies. Experience in subsea wet-mate connectors can be found in the offshore oil and gas industry and in military applications but for limited voltages (up to 1 kV) and at rather high costs. Development of future marine energy plants will probably require cable suppliers to provide purposely designed solutions for these technologies. Currently dry-mate connectors are mostly used although they need more complicated maintenance operations.

- **Bus**
  - *AC or DC bus, depending on what converter is hosted on the device or on monopole above the water*

    A bus would be almost certainly required in case of multiple-devices arrays. As mentioned before, depending on the converter technology, collection of power signals might be operated in DC or AC

- **Hub**
  - *May host bus-DC/AC converter (choose converter technology) or AC/DC, or AC/DC/AC*

    The bus may be installed inside a structure representing a Hub or an offshore substation. In this case a power converter might be placed inside this structure along with switchgear and protection equipment. In case of AC transmission lines, reactive power compensators would be required. Voltage Source Converters (VSCs) or Line Commutated Converters (LCCs) should be considered for HVDC connection. If the farm or array is of limited size (such is the case of existing infrastructures) and a power converter is already included in the device design, then the Hub might contain only the bus making much easier its construction. Switchgear is highly recommended to allow isolation of single lines but could impose severe requirements on the Hub and therefore could be avoided provided that the downtime of the whole farm associated with a fault of a single line is preferable to design a Hub equipped with switchgear.

  - *Transformer*

    In large scale installations far several kilometres from shoreline, a transformer will probably be necessary to elevate voltage for power transmission, both in AC and DC connection. It is clear that a transformer would as well complicate the design of the Hub, particularly if supposed to be placed on the seabed.

- **Sub-Sea Cable**
  - *Voltage rating depending on farm size/rated power and distance from coast*

    Sub-sea cables are usually designed based on rated power and voltage level. High Voltage transmission would be almost a standard requirement for large scale farms to avoid unacceptable ohmic losses. Distance to shore and installed capacity would be primary indicators for a correct cable selection. Laying operations should be also carefully assessed since maintenance operations on sub-sea lines are extremely complicated and expensive

  - *DC or AC*

    Choice between DC and AC transmission is fundamental and preliminary to the detailed definition of the whole equipment. Cables for the two options are slightly different in construction. However main differences might depend also on the number of lines required. It has been shown ([15] and [16]) that HVDC solutions for transmission distances become economically preferable to HVAC larger than a specified value.

- **On-Shore Station**

  Sub-sea cable will connect to an on-shore station. It is likely that this station will be located at a suitable grid connection point but in some cases connection between the station and a grid point will have to be provided

  - *Protection (circuit breakers and switchgear)*

    Protection equipment should be installed on both sides of the connection. However, as said before, in case of small size installations with demonstration purposes, protections might be avoided on the offshore side and included only on the device. Such a configuration would be much easier to build but would determine a very high risk of damage for the subsea line and difficulties in determining failure points making repairing operations uneconomic.

  - *(if required) Flywheel and doubly-fed machine to smooth farm power output*

    Frequency control and power quality requirements might impose storage devices to guarantee a smooth power output. This will depend on the applicable Grid Code and on the farm design since different types of storage might be included at a device or array scale.

  - *Transformer*

    Transformer might be necessary depending on the point of connection to the Grid. If the voltage level along the cables is equal to the one demanded by the Transmission or Distribution System this element could be avoided.

  - *Additional equipments*

    Additional equipment such as capacitor banks, TSC (Thyristor Switched Capacitors) or STATCOM can be required for reactive control or mitigate voltage variations. .

- **Connection**

  In case the grid connection point was distant from the on-shore station, additional cabling should be provided. A secondary station would be required with proper equipment:

  - *Transformer*
  - *Protection*

- **Grid**

  - *Distribution or transmission line?*

    Depending on the voltage and the power output, Grid operators would require connection to distribution or transmission line (see chapter 2).

  - *Standards and agreement with grid operator*

    Connection should be agreed with grid operator and should comply with local standards and regulations (see chapter 2). It is however expectable that a proper set of standards will be also defined for marine energy electrical production.

3.3 AC TRANSMISSION

3.3.1 HVAC transmission

Most of the existing offshore transmission systems use High Voltage Alternating Current (HVAC) for the transport of electrical power between mainland and stations located on (or under) the sea. It is a well established technology. An HVAC system generally contains the following main components:

- AC collecting system in the platform
- Offshore transforming substation with transformers and reactive power compensation
- Three-phase submarine cable (generally XLPE three-core cable)
- Onshore transforming substation with transformers and reactive power compensation

When the voltage of the transmission line and the grid voltage are equal the transformer is not necessary. Due to their construction, distributed capacitance in submarine cables is much higher than capacitance in overhead lines. Thus the transmission length is reduced for marine applications. Reactive power increases with voltage and length of the cable and long-transmission distances require big reactive compensation equipment at both ends of the line.

3.3.2 Possible configurations

A first basic concept of electrical transmission might contemplate a separate connection between each marine energy device and the onshore substation. In this case the installation of an offshore substation would be avoided.

This type of configuration is most likely applicable to early stage marine farms or single devices, especially if placed at limited distance from the coastline. In figure 3.3 it can be observed that every converter was assumed to carry a converter and a transformer. Since the transformer should be installed on board it is likely that only limited voltages are reachable (11 kV-33 kV).

This configuration has the clear advantage of avoiding the building of a substation but the need for several cables and the low voltage transmission makes it suitable only for a very small number of devices and a very short distance to shore. Moreover intermediate connectors between umbilical and transmission cables would be required.

The only real advantage arising compared to a configuration with an inter-connection of the devices and a unique cable (fig. 3.4) would be due to a higher availability (a fault of the line in the latter would mean a complete loss of the power production)

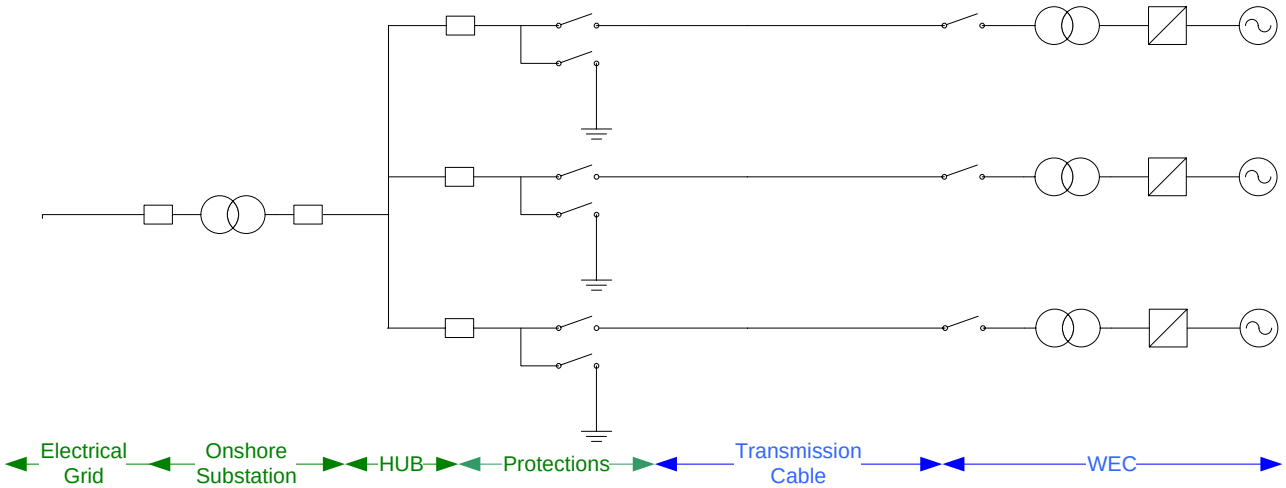

Figure 3.3 First option of AC connection system

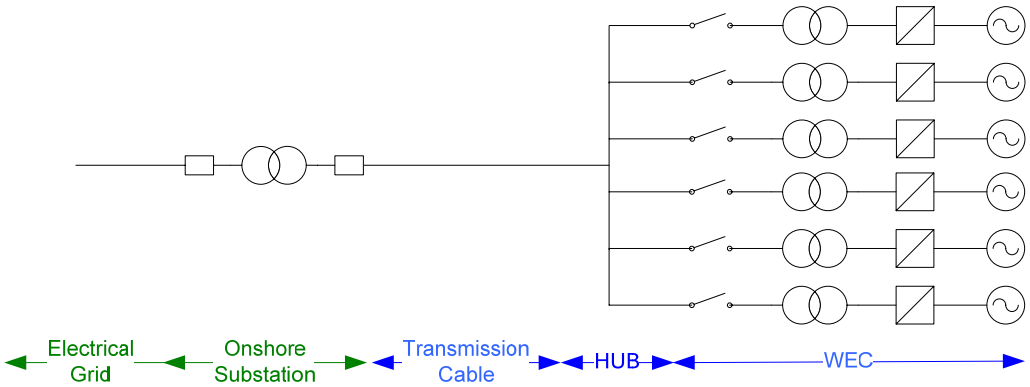

Figure 3.4 Second option of AC connection system

Large scale farms will likely make affordable the cost of installing an offshore substation with an electrical transformer to elevate the voltage. Losses on the cables would be consistently reduced due to higher voltage transmission.

Moreover, large distances to shore would impose the need for reactive power compensation to comply with power quality requirements. Offshore substations would be built also to host these elements. This would pose many problems from the engineering point of view that will be briefly outlined in chapter 4.

Figures 3.5 and 3.6 show two possible arrangements for this option. The main difference lies in the number of transmission lines. Large size farms might include the possibility of connecting different clusters of arrays in order to increase the availability of the whole plant. Another advantage is the possibility to install different marine energy technologies in such a way that each of them could generate on a different transmission line (open sea testing facilities take into account this option). This of course could suppose an additional cost in terms of transformers and protections.

It has to be noticed that cable costing is not linear in function of the number of the cables as the same route and laying procedure might be applied for more than one cable.

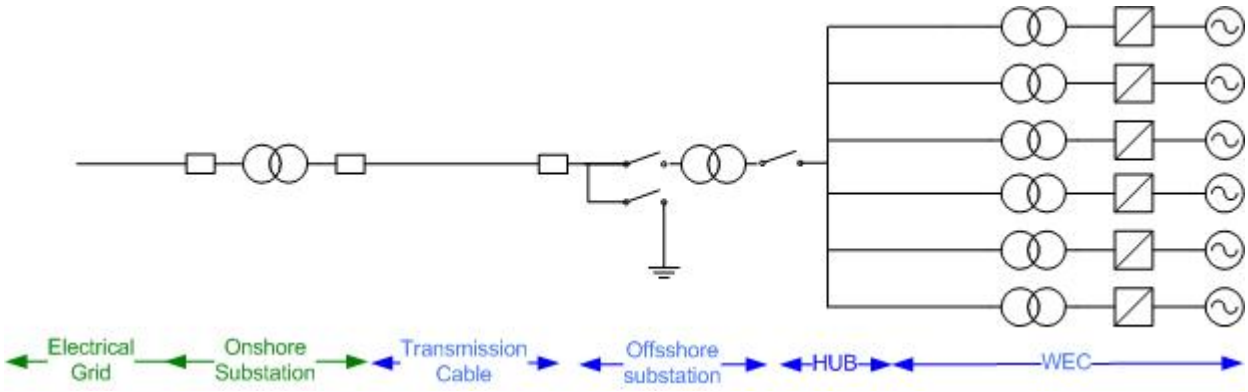

Figure 3.5 Third option of AC connection system

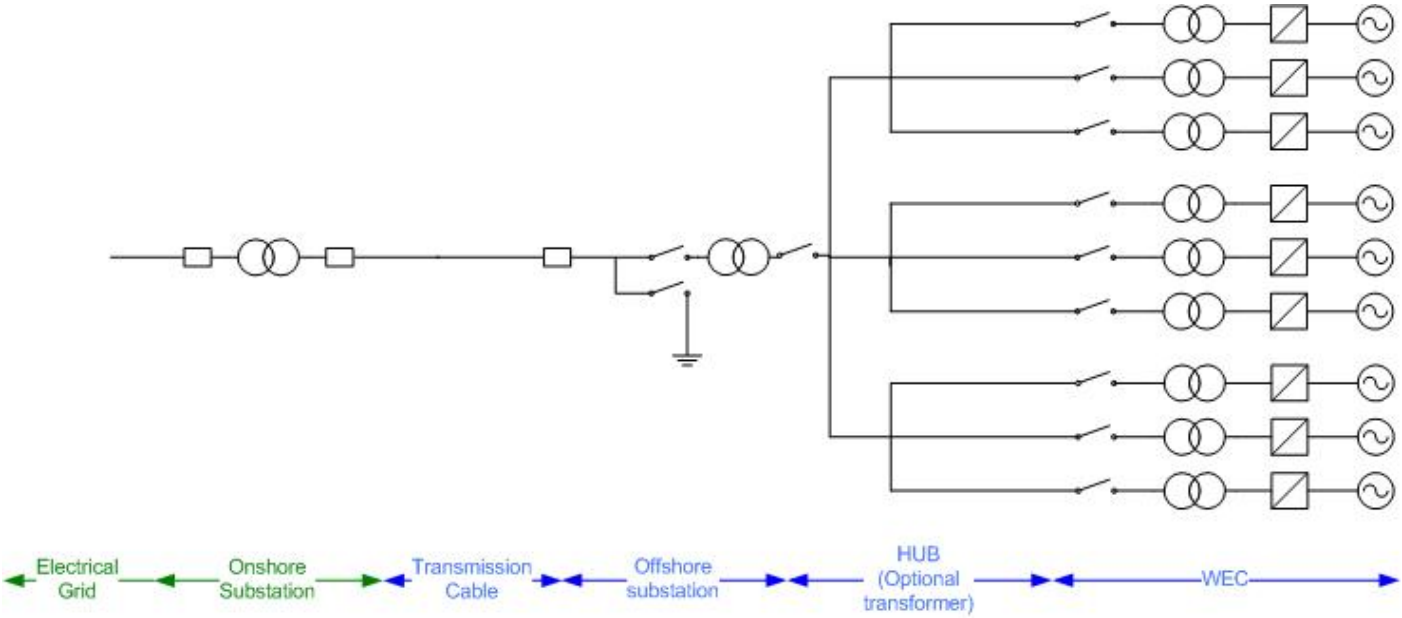

Figure 3.6 Fourth option of AC connection system

3.4 DC TRANSMISSION

3.4.1 HVDC LCC

A HVDC LCC or classical HVDC system is based on Line Commutated Converters using thyristors as the switching element. The origin of the name of the converter is the need of an existing AC network in order to achieve proper commutation. This kind of transmission system can only transfer power between two (or more) active grids and an auxiliary start-up system would be necessary in the offshore marine farm. Application of HVDC LCC submarine transmission has only been used for connection of high voltage grids and there is no single converter station located in the sea.

HVDC LCC systems have the following main components at each end of the transmission line:

- Transformers
- LCC power converter based on thyristors
- AC and DC filters
- DC current filtering reactance
- Capacitors or STATCOM for reactive power compensation
- DC cable

Substations at both ends need transformers in order to raise the voltage to the necessary level for the transmission line. Isolation and protection of DC stations are particularly challenging and require expensive solutions.

The LCC power converter is the heart of a HVDC LCC system because it is the element that obtains the AC to DC conversion and viceversa. LCC converters need reactive power for proper operation because the current is out of phase with the line voltage due to the control angle of the thyristors.

The high content of low order harmonics generated by LCC need the interposition of AC and DC filters. This would serve also to avoid the generation of AC currents in the cable. STATCOM or capacitors are required for reactive power compensation.

3.4.2 HVDC VSC

With the discovery of the Insulated-Gate Bipolar Transistor (IGBT) a new world of opportunities opened for HVDC transmission. HVDC VSC is a recent technology where thyristors are substituted by IGBTs, and was only made available for use in commercial applications a few years ago. Because of its complexity, only two companies manufacture it, ABB with the HVDC Light and Siemens with the HVDC plus.

HVDC VSC systems allow independent and total control of active and reactive power at each end of the line and power transmission can be controlled with high flexibility. At the offshore station reactive power can be supplied for the marine generators and at the onshore substation reactive power can be used to regulate voltage at the Grid connection point. HVDC VSC converter stations are more compact than HVDC LCC and the offshore platform size can be smaller and less expensive. VSC converters can even provide black start capability thus no additional start-up mechanism is necessary offshore.

A HVDC VSC system has the following main components:

- Transformers
- HVDC VSC converter substations (offshore and onshore, possibly hosting the transformer as well)
- AC and DC filters
- DC current filtering reactance
- DC cable

All filters and reactances in a HVDC VSC are smaller than the equivalent HVDC LCC components because of the higher switching frequency of the converter and there is no need for reactive power compensation because the converter is able to control reactive power.

HVDC VSC can also increase the flexibility of the generating technologies and the cost of power converters if very high voltage

3.4.3 Possible configurations

Figure 3.7 shows a possible option for a HVDC transmission configuration. Here again it has been assumed that all devices are equipped with a converter and a transformer. Power could be generated and transmitted to an offshore substation at 11 kV where a large transformer would elevate the voltage up to 132 kV or more. A LCC converter (or a VSC converter) would then rectify the current to transmit the energy along the cable. Onshore station should include another converter and possibly a transformer to lower the voltage depending on the grid voltage at the connection point.

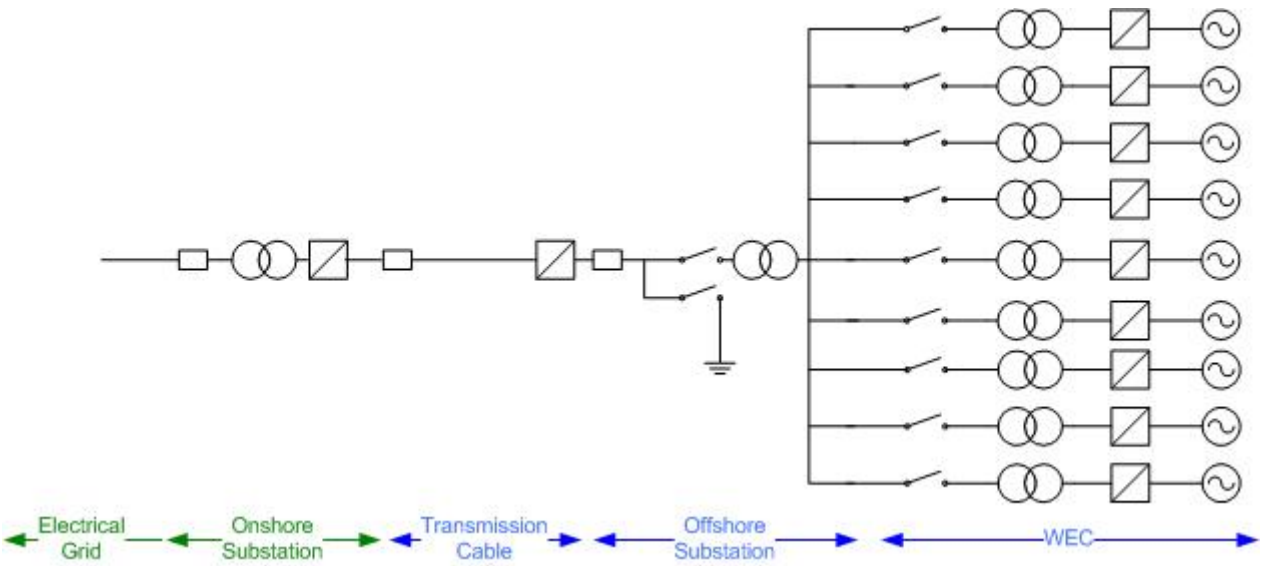

Figure 3.7 First option of DC connection system

Figure 3.7 shows a monopole configuration where one of the terminals of the rectifier is connected to earth ground. Bipolar transmission uses a pair of conductors, each at a high potential with respect to ground, in opposite polarity. Since these conductors must be insulated for the full voltage, transmission line cost is higher than a monopole with a return conductor.

Figure 3.8 shows a possible alternative where, instead of installing a transformer on the offshore side, marine energy device are connected in series. This option would be particularly feasible if high voltage generators were installed on board of the devices and would bring drastic reduction of costs and energy losses.

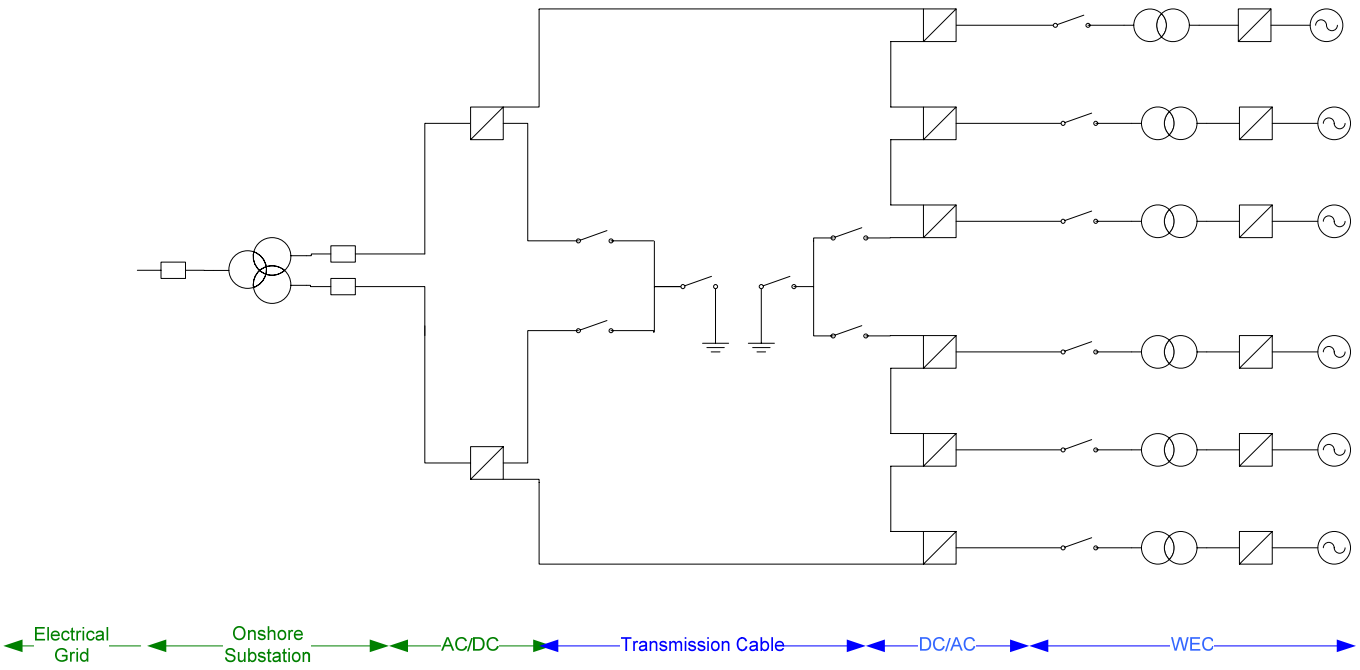

Figure 3.8 Second option of DC connection system

4 GRID CONNECTION INFRASTRUCTURES

4.1 BACKGROUND: GRID-CONNECTED MARINE ENERGY INFRASTRUCTURES

4.1.1 Marine energy open sea testing facilities

The recent development of marine energy technologies has underlined the need for extensive open sea testing operation to appraise efficiency and profitability of the designed technologies and to identify possible factors for optimisation and improvement.

Since the primary scope of most of the ocean energy converters is the production of electrical energy to be delivered to the grid, many of the testing facilities already built or to be built in the future include the possibility given to the developers to connect their device to the grid and provide them with a set of structures and equipment especially designed for this operation. Though it is unlikely that the lay-outs defined for these projects are applicable to large scale installations, early stage marine energy deployment in other areas will probably has to face similar challenges.

At present the only operating open sea testing facility is the European Marine Energy Centre (**EMEC**).

EMEC ([17]) is the first centre created for this purpose in the world and includes two installations for testing: one for wave energy converters, in operation since October 2003 and the other one for tidal energy converters.

Figure 4.1 A view of the EMEC test site ([17])

The wave testing site is located near Stromness on the Orkney Islands in Scotland. Its principal characteristics are:

- Testing zone placed to between 1 and 2 kilometres from the coast and at a depth of 50m
- 4 berths of 2,2 MW capacity. Total power of 8,8 MW
- Every berth is directly connected to a substation in land across one cable of 11kV
- Secondary substation (from 11 to 33 kV) close to the coast
- Maximum power feeding to the grid: 7MW

The principal characteristics of the tidal site:

- Located close to Eday, on the Orkney Islands in Scotland.
- Area of 2km times 3,5 km
- Water depth between 25 and 50m
- Tidal flow of 3,5m/s - 5 berths of 5 MW each one. The total power is 25 MW
- Every berth is directly connected across a cable of 11kV and 5MVAs (135mm2) to the substation
- Secondary substation (from 11 to 15 kV) close to the coast
- Maximum power feeding to the grid: 4MW

Figure 4.2 and 4.3 show respectively the lay-out of the EMEC wave and tidal testing site.

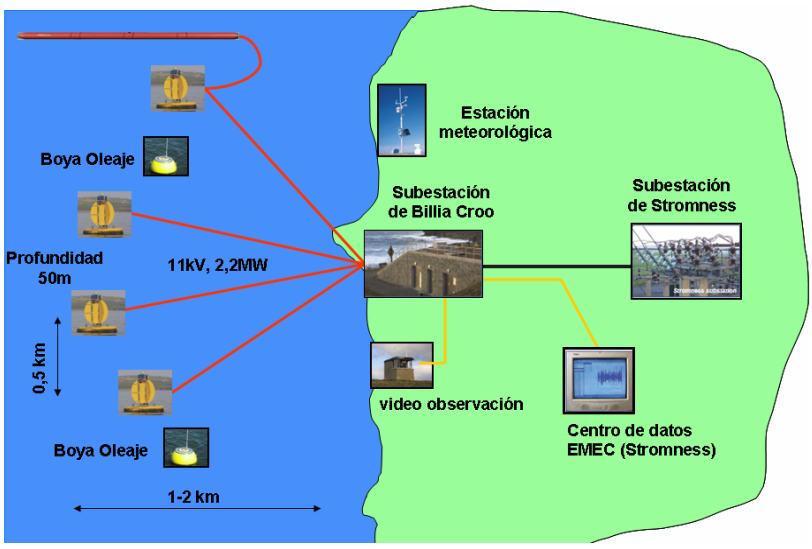

Figure 4.2 EMEC wave testing site lay-out

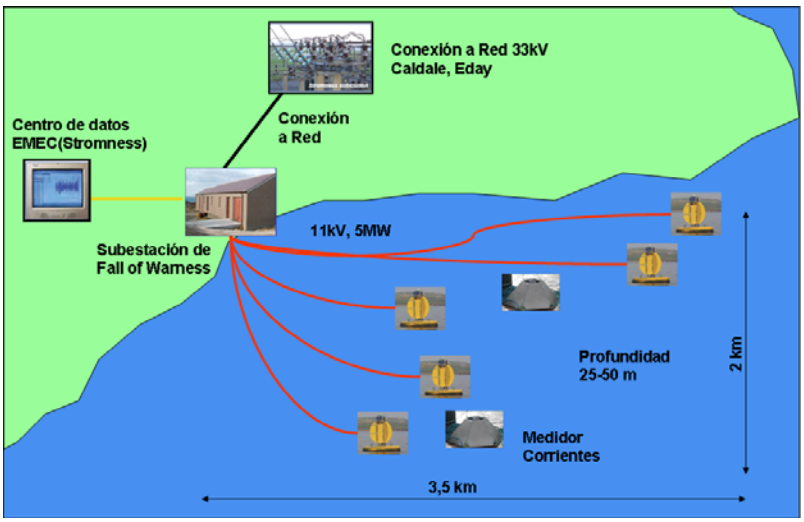

Figure 4.3 EMEC tidal testing site lay-out

Apart from EMEC, a number of different institutions and organisations across Europe have been funding similar projects to build testing infrastructures for marine energy converters. Grid-connected facilities will be installed in Cornwall (UK), in the Basque Country (Spain), at Figueira da Foz (Portugal) and at Frenchport (Ireland).

The former two have already defined the grid connection infrastructure that will be installed.

The **Wave Hub** ([18]) will build an electrical grid connection point 12-15 km offshore to which wave energy devices will be allowed to connect. It will provide a well-defined and monitored site with electrical connection to the onshore electricity grid and will greatly simplify and shorten the consents process for developers.

Its principal characteristics are:

- Located off the Hayle's coasts (Cornwall), United Kingdom
- The occupied area is 2 times 5 km, 10 nautical miles to the north from St. Ives
- Water depth is between 50m and 65m.
- 4 submarine transformers of 11/24 kV and 5 MW capacity
- A submarine Hub of 20 MW
- Onshore substation with single connection point to the Hub

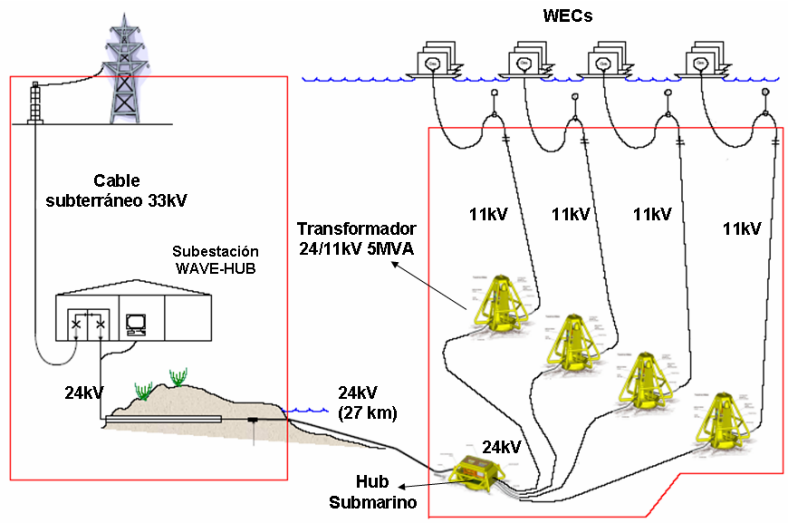

Figure 4.4 Wave Hub electrical connection lay-out ([18])

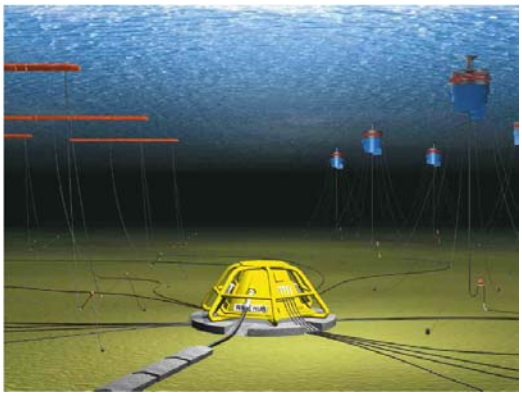

Figure 4.5 The Hub (artist impression) ([18])

The **BIMEP** (Biscay Marine Energy Platform [14]) is intended for research, demonstration and operation of offshore Wave Energy Converters. The project started in 2007 with the conceptual study and the selection of the most appropriated location of the Basque coast. In 2008 detailed design works are being carried out and the permission process has been started. Bimep is expected to be in operation in 2010.

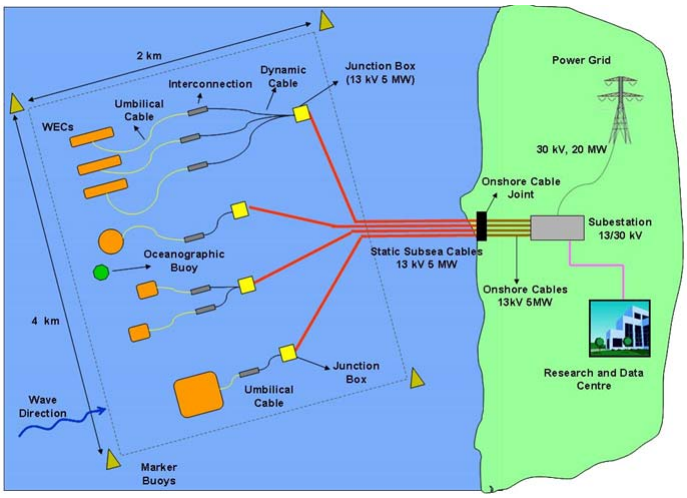

Figure 4.6 Bimep electrical connection lay-out

Its principal characteristics are:

- Located off Biscay coast in the Basque Country (Spain)
- Water depth between 50-90 m

- Closest point to the land: 750 m
- 4 berths,13 kV & 5 MW: 20 MW
- Sub-sea cables for each berth
- Onshore substation (13/30 kV)
- Estimated budget: 15 M€

4.2 ELEMENTS OF A GRID CONNECTION INFRASTRUCTURE

4.2.1 Outline of the infrastructure

As mentioned in chapter 3, the outline of a connection infrastructure depends on the chosen configuration scheme. The definition of the rated power of the farm and the distance to shore is the first step to determine a suitable configuration for the electrical connection. The assessment of different options could be based at a preliminary level on the evaluation of their efficiency and accordance to the grid requirements. However, electrical connection infrastructures in offshore locations represent often real challenges for offshore and civil engineers and usually require huge investments to assure reliable structures.

It is therefore clear that the design of the grid-connection of a marine energy farm must take into account several aspects related to the actual feasibility of the proposed solution and the decision of the proper scheme should be based on a detailed estimation of the economic impact of the required investments.

Generally the grid connection of a medium-large scale marine energy farm would require the following physical elements:

- Device cabling and conversion equipment (power converter, transformer and umbilical cable)
- Cable connectors
- Offshore substation
- Subsea transmission cables
- Onshore substation

As introduced in chapter 3, for small size farms some elements might be different or even avoided.

Conversion equipment and umbilical cables for device inter-connection are currently device-specific and dependent on the generator type considered (see chapter 2). It is expected that in the future most of the marine energy technologies will be provided with on-board converter and transformer while the design of the umbilical cable will probably be dictated by the deployment site. Umbilical cables for power transmission have been used in the offshore industry for decades but their application to marine energy technologies might require purposely designed solutions as dynamic loads due to motion of the devices (particularly wave energy floating technologies) are very different from the ones commonly experienced in offshore platforms (the CORES project [19] provided some results based on dynamic analysis that confirm the need for special products).

On the other hand, the design of offshore substation, subsea cable and appropriate connectors is likely to be more related to the deployment site than to the device type. This is particularly true observing the fact that most of the testing infrastructures currently being proposed do not make reference to any particular device (apart from the distinction between wave and tidal technologies). Based on this rationale, previous experience of offshore wind industry is very useful to get an understanding of the technical issues related to the design of these elements.

On the following we give a brief introduction to these three components. Onshore substations are not considered, because of their relative standard construction: typical solutions would include transformers for voltage elevation, capacitors for voltage control and air-insulated or gas-insulated switchgear. The reader can consult the manufacturers' websites for more information (e.g. ABB www.abb.com or Siemens www.siemens.com).

4.2.2 Cable connectors

Connection of marine energy devices to the offshore substation should be performed through connecting elements, capable of transmitting efficiently the electrical power and allowing quick and easy connection and disconnection (for possible maintenance of the device and/or the cable itself).

Commercial off-the-shelf mateable power umbilical terminations, also known as UTA (Umbilical Termination Assembly) are widely available for ROV (Remotely Operated Vehicles) applications. Those connection systems are expensive high performance devices that should be adapted from oil-related industry, and consist basically in free-flooding structures to which the cable armour is fixed. One of the main limitations to their application to offshore marine renewable industry is the relatively low power (up to about 100 kW) and voltage transmission capability (generally up to 1 kV).

Connection devices are usually decomposed in two categories

- **Dry mate:** Topside mating and subsea deployment
- **Wet mate:** Either topside or subsea mating

Obviously dry-mate connectors are used where equipment is easily retrievable to the surface for repair. When the cable recuperation is not possible or suggests high costs operation, wet-mate connectors use is privileged, although they are generally more expensive than the dry-mate ones.

Wet-mated connection systems are subdivided in three classes:

- ROV-mate.
- Diver-mate (manual)
- Stab-plate.

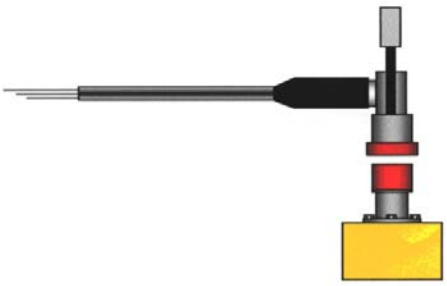

Figure 4.7: ROV-mate single connector (deep water) ([20])

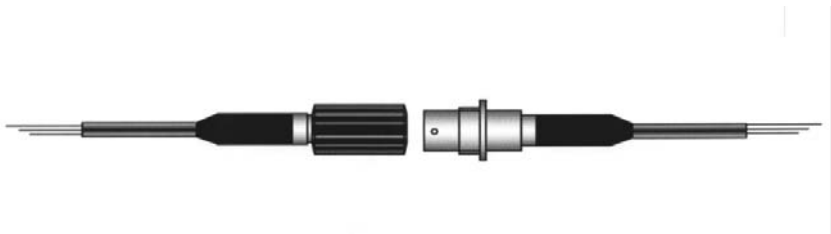

Figure 4.8: Diver-mate single connector (shallow water) ([20])

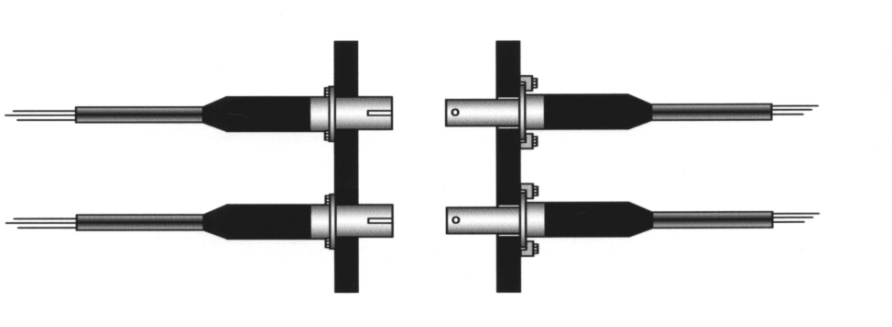

Figure 4.9: Stab-plate multi-connector ([20])

The choice of the proper infrastructure should account for maintenance and installation operations required for connection of the devices. Clearly the adoption of dry-mate connectors, even if less demanding in terms of initial investments, might determine very high operating costs.

Currently wet-mate connectors for the power and voltage ranges applicable to marine energy converters are not available on the market but it is likely that future development will induce offshore suppliers to design specific solutions for marine energy technologies. One such example is given in figure 4.10 where a connector produced by Hydro Group Plc. specifically for marine renewable technologies is shown. This element was designed to be dry-mated and can transmit up to 6 MW power at 11 kV.

Figure 4.10: HRC Hydro Renewables Connector designed by Hydro Group ([21])

4.2.3 Offshore substation

Offshore substations are used to reduce electrical losses by increasing the voltage and then exporting the power to shore. Generally a substation does not need to be installed if:

- The project is small (~100 MW or less)
- It is close to shore (~15 km or less)
- The connection to the grid is at collection voltage (e.g. 33 kV)

Early stage marine energy projects are likely to satisfy all of these requirements, therefore building of properly designed offshore substation is not yet a primary need for ocean energy deployment. However, most future farms will be large and/or located far from shore, and they will require one or more offshore substations.

A number of offshore substations have been installed and operated for offshore wind energy farms, whose large size justified the high cost linked with their construction. Typically wind substations are fixed platforms based on concrete foundations and would probably not be suitable for deep water deployments such that possibly required for wave energy devices. Figure 4.7 shows a typical configuration of an offshore wind farm, where a series of rows of wind turbines are connected to an offshore substations where voltage is raised up to levels appropriate for power transmission.

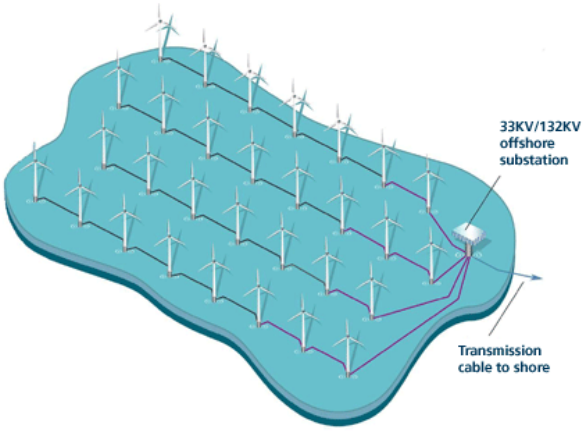

Figure 4.11 Typical offshore wind farm scheme with electrical substation ([22])

Offshore substation will typically comprise the following key components:

- Transformers
- Electrical switchgear
- Back-up electrical generator and batteries

Future large scale marine energy deployment would probably have to reconsider the design of purposely built substation since fixed structures with piled foundations, as introduced, would be too expensive for deep water installations. For such cases there would be essentially two options:

- **Floating substations:** This option would allow the adoption of standard electrical equipment on board provided that watertight integrity is maintained and would be relatively easy to maintain and operate. Design of these structures would be however rather challenging because they should be capable of withstanding possibly very large wave loads and at the same time guaranteeing a very limited footprint (otherwise umbilical connection from devices might suffer severe damaging). Some solutions of this kind have been proposed but they are still at an early development stage and no concept has actually proven its feasibility. Experience from oil and gas industry is the key in many proposed designs such as moored semi-submersible platforms or Tension-Leg Platforms. Some are actually being considered also as platform for floating wind turbines (e.g. work being carried out by researchers of the Massachusetts Institute of Technology)
- **Subsea substations:** Subsea installations would guarantee more safety in terms of load resistance and positioning but would require very expensive protection equipment for the electrical devices (most likely switchgear should include sealed compartments full of pressurised oil). Moreover maintenance would be very difficult or almost impossible in some cases since installations placed on the seabed would be operated only by Remotely Operated Vehicles, unless the water depth is low enough to allow divers interventions. Disconnection of the cables would be extremely difficult and mostly require the adoption of wet-mate connectors (more expensive than the dry-mate ones). Subsea substations would probably be permanent structures and therefore would require very high reliability and redundancy to assure farm availability.

4.2.4 Subsea Cable

Electric energy generated by marine energy farms requires one or more submarine cables to transmit the power generated to the onshore utility grid that serves the end-users of this renewable energy source. Figure 4.12 shows cross-section design of typical submarine cables for AC power transmission

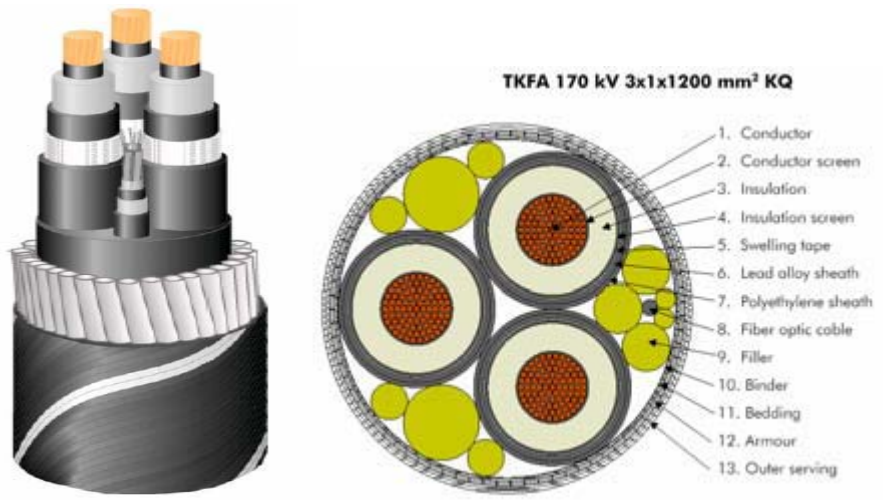

Figure 4.12 Typical three core XLPE submarine cable for 150/170 kV, 3*1*1200 mm2; left ABB (FXBTV), right: Nexans (TKFA)

Subsea cables are generally composed by several elements:

- **Conductors:** The conductor in medium and high voltage is copper, less commonly aluminium which has a lower current-carrying capacity and requires greater diameters. Capacity increases proportionally with the cross-sectional area, which can range up to about 2000 mm^2 before cable becomes unwieldy and the bending radius is too great. Large cables may have a bending radius of 6 m. The amperage is function of voltage, length, insulation type, laying formation, burial depth, and soil type.
- **Number of conductors:** If possible, in AC cables the three phases are bundled in order to reduce cable and laying costs. It also produces weaker electromagnetic fields outside the cable and has lower induced current losses than three single core cables laid separately.
- **Screening:** A semi-conductive screening layer, of paper or extruded polymer, is placed around the conductor to smooth the electric field and avoid concentrations of electrical stress, and also to assure a complete bond of the insulation to the conductor.
- **Insulation:** Three types of cable **insulation** are used for submarine transmission for long distances:
    - Low-pressure oil-filled (LPOF), or fluid-filled (LPFF) cables, insulated with fluid-impregnated paper, have historically been the most commonly used cables for submarine AC transmission. The insulation is impregnated

with synthetic oil whose pressure is typically maintained by pumping stations on either end. The pressurized fluid prevents voids from forming in the insulation when the conductor expands and contracts as the loading changes. The auxiliary pressurizing equipment represents a significant portion of the system cost. LPFF cables run the risk of fluid leakage, which is an environmental risk.

  - Similar in construction are the solid, mass-impregnated paper-insulated cables, which are traditionally used for HVDC transmission. The lapped paper insulation is impregnated with a high-viscosity fluid and these cables do not have the LPOF cable's risk of leakage.
  - Cross-linked polyethylene (XLPE, also called PEX) has a lower cost than LPOF of a similar rating and has lower capacitance, leading to lower losses for AC applications. XLPE can be manufactured in longer lengths than LPFF. Another extruded insulation used in submarine cables is ethylene propylene rubber (EPR), which has similar properties to XLPE at lower voltages, but at 69 kV and above, has higher capacitance.

- **Sheath:** Inner sheath is used to earth the cable as a whole and to carry fault current if the cable is damaged. It also creates a moisture barrier. In AC cables, current will be induced in this sheath, leading to circulating sheath losses; various sheath-grounding schemes have been developed to reduce circulating currents that arise in the sheath.
- **Armour:** An overall jacket and then armouring complete the construction. Corrosion protection will be applied to the armour. Fibre optic cables for communications and control can be bundled into the cables.

4.2.4.1 Technical issues related with AC transmission

The most cost effective AC technology for this type of interconnection is solid dielectric (also called extruded dielectric or polymeric insulated) cable, usually with cross-linked polyethylene (XLPE) insulation. This is the cable system technology used for all offshore wind farms constructed to date (all of which are located in Europe) primarily as a result of:

- Interconnection
- Installation
- Maintenance
- Operational reliability
- Cost effectiveness

The main difference between XLPE cables and the old oil-impregnated paper (OIP) cables is the insulation. The XLPE insulation can support higher temperatures, 90ºC in the conductor in steady-state, and 250ºC in a 3 second short-circuit.

Also the losses of XLPE are significantly lower than the OIP ones, and since it does not use oil it is environmental friendly, easy to install, and require less maintenance. From its components it is important to note two things:

- The optic fibre, which is used to communicate between the farm and the management centre on the shore.
- The sea shielding and the polypropylene thread, which have two objectives: to provide both electric isolation to the cable and mechanical protection;

The biggest electrical difference between cables and overhead lines is the large capacitance of the first ones. This phenomenon increases the reactive power generated by the cables, decreasing its capacity to transmit active power, especially over long distances. Because of this, it is necessary to provide reactive compensation at the cables extremities.

The capacitance of HVAC insulated cable plays a major role in limiting the technically and economically feasible length of HVAC cable. Capacitance causes charging current to flow along the length of the cable. Because the cable must carry this current as well as the useful load current, this physical limitation reduces the load carrying capability of the cable. Because capacitance is distributed along the entire length of the cable, the longer is the cable, the higher the capacitance and resultant charging current will be. As the cable system design voltage is increased to minimize line losses and voltage drop, the charging currents also increase, worsening the situation.

The charging current is given by the formula:

$$I_C = 2\pi fCE$$

Where f is frequency, so that in DC circuits $I_C = 0$ in the steady state. Capacitance C is a function of cable length, geometry and insulation type (XLPE insulation has the lowest C value of the most commonly used alternatives for insulation in HVAC cables). E is voltage. The available capacity of the cable (ampacity) to carry useful load current I_P, in its simplest form, is given by:

$$I^2{}_p = I^2{}_T - I^2{}_C$$

I_T = cable rated ampacity.

Because the cable capacitance is a distributed parameter, the charging current is not uniform along the length of the cable. If the charging current were supplied from one end only (to use the more exact convention, reactive power would be absorbed at that end), I_C would be highest at that end and the voltage would be highest at the opposite end of the cable. These peak values of I_C and voltage become problematic for electrical reasons and are the main limiting factors in selecting the cable. If the charging current could be supplied from both ends, I_C would be highest at both ends but only half the magnitude if fed from one end only; the voltage would be highest in the middle of the cable.

4.2.4.2 AC power losses

Real power losses within the cable also limit the practical distance for HVAC cable transmission. Losses in an HVAC submarine cable have four components:

- Dielectric losses, which are relatively small for limited transmission distances
- I^2R losses in the conductors, usually the largest component of losses,
- I^2R losses in the metallic shield: current flow is induced in the shield by the current in the conductors; shield losses can be on the order of one-third of conductor losses
- I^2R losses in the steel wire armour: current flow is induced in the armour by the current in the conductors; armour losses can be on the order of one-half of conductor losses.
- It has to be noticed that if the transmission current has some harmonics, there are additional losses.

4.2.4.3 Effect of increasing transmission cables length

As the length of high voltage AC transmission cable increases, the following can be expected:

- Increased cable lengths will result in higher initial capital costs
- Construction and maintenance costs will increase
- Line losses will increase;
- Complexity of the design required to maintain operational reliability of the cable system would increase; and
- Amounts of available energy (MW) transmitted to the on-shore grid will decrease, due to increasing capacitance

4.2.4.4 Physical limits

Transfer capacities of three phase XLPE AC cables are limited, most of all as a consequence of restrictions of their physical dimensions. The maximum cross section is about 1200 mm^2, a cable diameter of more than 230 mm and a specific weight of about 100 kg/m.

Physical limits for different types of cable and transmission are summarised in table 4.1.

Table 4.1 Capacities of high voltage cable (Hausler, ABB, 2002)

System	**AC**		**DC**		
	3 single-core cables		**bipolar operation, 2 cables**		
Cable insulation type	XLPE polymer	LPOF: Oil- filled paper	LPOF: Oil- filled paper	Mass imp. Paper	XLPE polymer
Maximum Voltage	400 kV	500 kV	600 kV	500 kV	150 kV
Maximum Power	1200 MVA	1500 MVA	2400 MW	2000 MW	500 MW
Max. length, km (mi.)	100 (62)	60 (37)	80 (50)	Unlimited	Unlimited

The most significant difference between AC and DC is that AC cables have a high capacitance and they generate reactive current. The power cable acts as a capacitor and charging current is produced along the entire cable, if the cable is longer more reactive power is generated. The reactive current reduces the active current-carrying capacity of the cable so requires a scheme to absorb the reactive current. For a length over 10 km some form of reactive power compensation will be required.

5 REFERENCES

[1] The EquiMar Consortium, EquiMar Deliverable D1.1: Global analysis of pre-normative research activities for marine energy, available at: www.equimar.org, 2008

[2] The EquiMar Consortium, EquiMar Deliverable D1.2: Recommendations from other sectors, available at: www.equimar.org, 2008

[3] Molinas M, Skjervheim O, Sørby B, Andreasen P, Lundberg S, Undeland T, Power Smoothing by Aggregation of Wave Energy Converters for Minimizing Electrical Energy Storage Requirements, *Proceedings of the 7th European Wave and Tidal Energy Conference, 2007.*

[4] The European Wind Energy Association (EWEA), Large scale integration of wind energy in the european power supply: analysis, issues and recommendations, *Available at : http://www.ewea.org/, December 2005*.

[5] De Alegria IM, Andreu J, Martín JL, Ibañez P, Villate JL, Camblong H, Connection requirements for wind farms: A survey on technical requirements and regulation, *Renewable and Sustainable Energy Reviews 11 pp. 1858-1872, 2007*.

[6] Slootweg JG, de Haan SWH, Polinder H, Kling WL, Voltage control methods with grid connected wind turbines: a tutorial review, *Wind Engineering 25 (6): pp. 353-365, 2001*.

[7] Ledesma P, Usaola J, Contribution of variable-speed wind turbines to voltage control, *Wind Engineering 26 (6), pp. 347-358, 2002*.

[8] Robles E, Integración en la red de la energia eolica, *Suficiencia investigadora, Universidad del Pais Vasco, 2006.*

[9] Koch F, Erlich I, Shewarega F, Bachmann U, The effect of large offshore and onshore wind farms on the frequency of a national power supply system; simulation modelled on Germany, *Wind Engineering 27 (5): pp. 3939-404, 2003*.

[10] Pelamis Wave Power, The Pelamis brochure, *available at: http://www.pelamiswave.com/*

[11] Martínez de Alegría I, Mártin JL, Kortabarria I, Andreu J, Ibañez Ereño P, Transmission alternatives for offshore electrical power, *Renewable and Sustainable Energy Reviews 13 (2009) 1027–1038*

[12] Ricci P, Lopez J, Villate JL, Santos M, Ruiz-Minguela P, Salcedo F, Control Strategies for Hydraulic Power Take-Off Systems in Wave Energy Converters, *Proceedings of the 2nd International Conference on Ocean Energy, Brest, 2008.*

[13] Christiansen P, Jorgensen KK, Sorensen AG, Grid Connection and Remote Control for the Horns Rev 150 MW Offshore Wind Farm in Denmark, available at: http://www.hornsrev.dk/nyheder/nyh_aug_02/grid_control.pdf

[14] bimep (BIscay Marine Energy Platform): http://www.eve.es/energia_marina/index_cas.htm

[15] Dorf RC ed., The Electrical Engineering Handbook, *CRC Press*

[16] Barberis Negra N, Todorovic J, Ackermann T, Loss evaluation of HVAC and HVDC transmission solutions for large offshore wind farms, *Electric Power Systems Research 76, pp. 916-927, 2006.*

[17] The European Marine Energy Centre (EMEC): www.emec.org.uk

[18] Wave Hub project: http://www.wavehub.co.uk

[19] CORES website: http://www.fp7-cores.eu

[20] Ocean Design Inc. website: www.oceandesigninc.com

[21] Hydro Group Plc. website: http://www.hydrogroup.plc.uk

[22] Barrow Offshore Wind Farm website: www.bowind.co.uk

[23] VV.AA. – *WaveNet: Full report* – 2003, available at: www.wave-energy.net/Library/WaveNet%20Full%20Report(11.1).pdf

[24] Thorburn K, Bernhoff H, Leijon M, Wave energy transmission system concepts for linear generator arrays, *Ocean Engineering, Volume 31, Issues 11-12, August 2004, Pages 1339-1349*

[25] Brakelmann H, Burges H, Transmission technologies for collective offshore wind farm connections, *Proceedings of the European Wind Energy Conference 2007, Milan.*

[26] Wright SD, Rogers A, Manwell JF, Ellis A, Transmission options for offshore wind farms in the united states, *AWEA 2002*

[27] Ackermann T, Barberis Negra N, Todorovic J, Lazaridis L, Evaluation of electrical Transmission Concepts for Large Offshore Wind Farms,

[28] Thorburn K, Leijon M, Farm size comparison with analytical model of linear generator wave energy converters, *Ocean Engineering 34 (2007) 908–916*