Integrated Instrumentation for Marine Energy Monitoring

Brian Polagye, James Joslin, and Andy Stewart

University of Washington

Northwest National Marine Renewable Energy Center

Andrea Copping

Pacific Northwest National Laboratory

EIMR: Methodology

April 30, 2014

Motivation: Environmental Risk Uncertainty

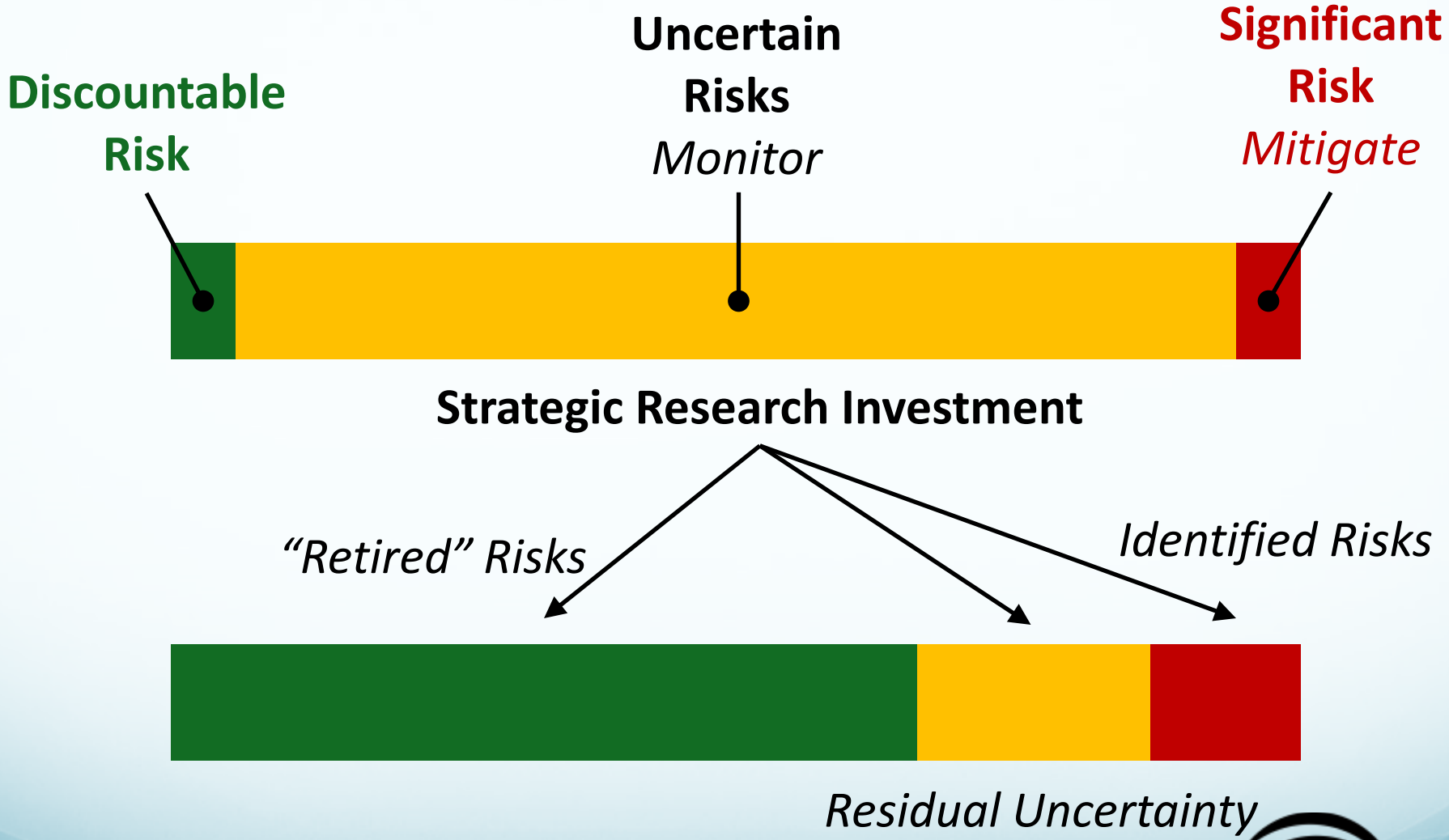

NNMREC
Northwest National Marine Renewable Energy Center

Reducing Risk Uncertainty

- **Severe outcomes are likely to rarely occur**
- **Observing interactions may require spatially *comprehensive* and temporally *continuous* monitoring**
- **Strategy likely to generate "data mortgages"**

Stereo-optical Cameras (2 Mpx @ 10 fps)	X	80 MB/s	X	3 months observations	=	600 TB of storage

***Example**: Continuous stereo-optical monitoring for a single camera pair. Comprehensive monitoring would require multiple pairs.*

NNMREC
Northwest National Marine Renewable Energy Center

Integrated Instrumentation Packages

- **Low-cost and near-term approaches to improve ratio of information gained to data archived**

Passive Acoustic Detection

- Omni-directional coverage at ranges on the order of 1 km
- Processing in near real-time

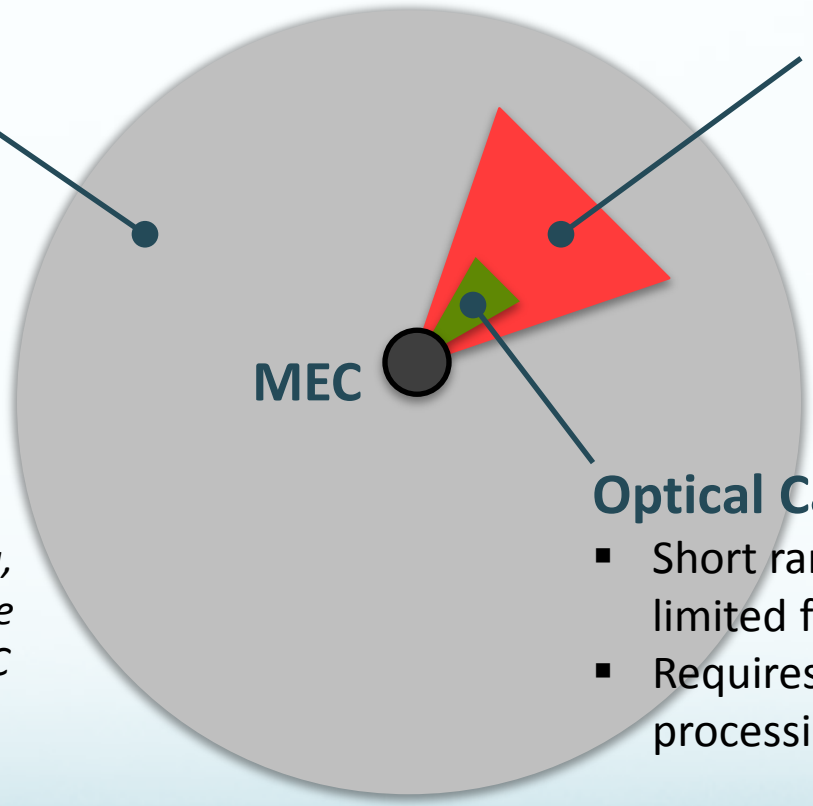

Multi-beam Sonar

- Tracking capability at ranges out to 100 m
- Processing in near real-time

Optical Camera

- Short range and limited field of view
- Requires archival processing

***Example**: Detection, tracking, and identification of a marine mammal approaching a MEC*

NNMREC
Northwest National Marine Renewable Energy Center

Constraints for Integrated Packages

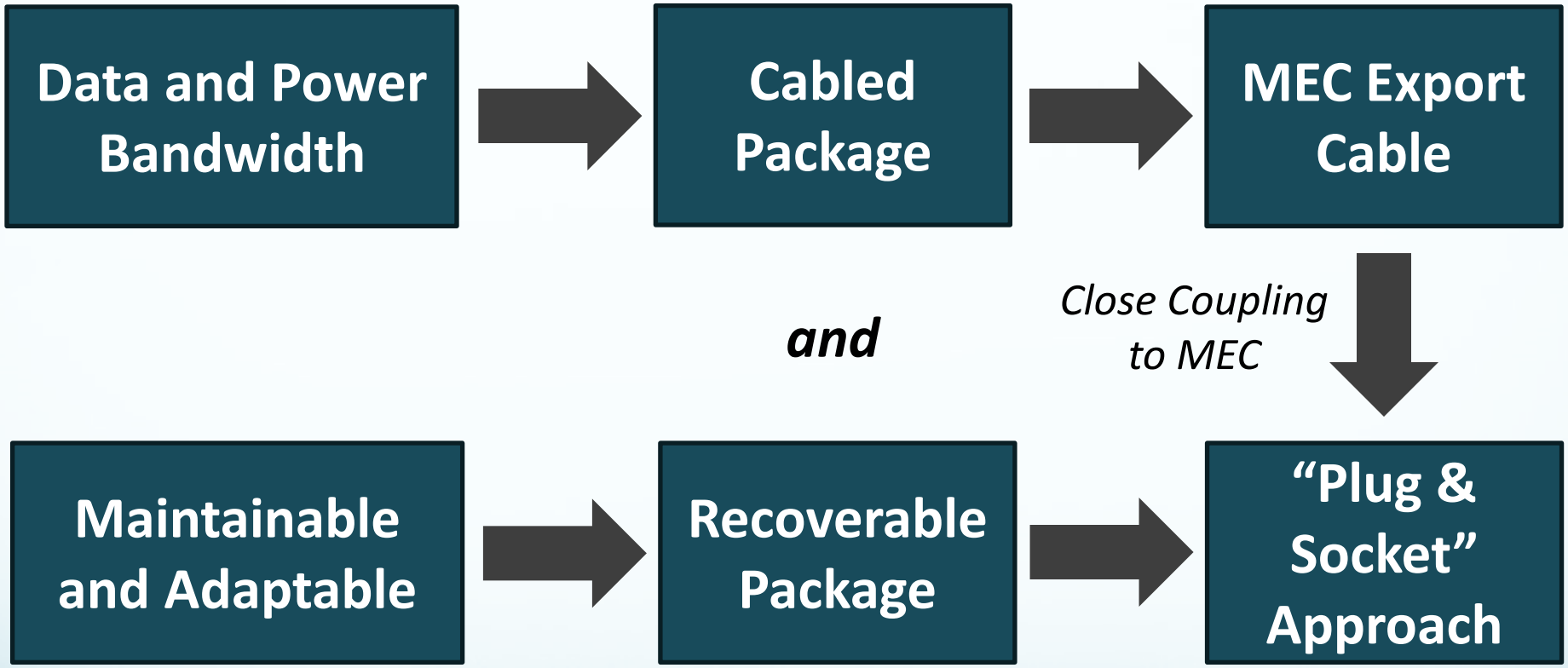

NNMREC
Northwest National Marine Renewable Energy Center

Adaptable Monitoring Package (AMP)

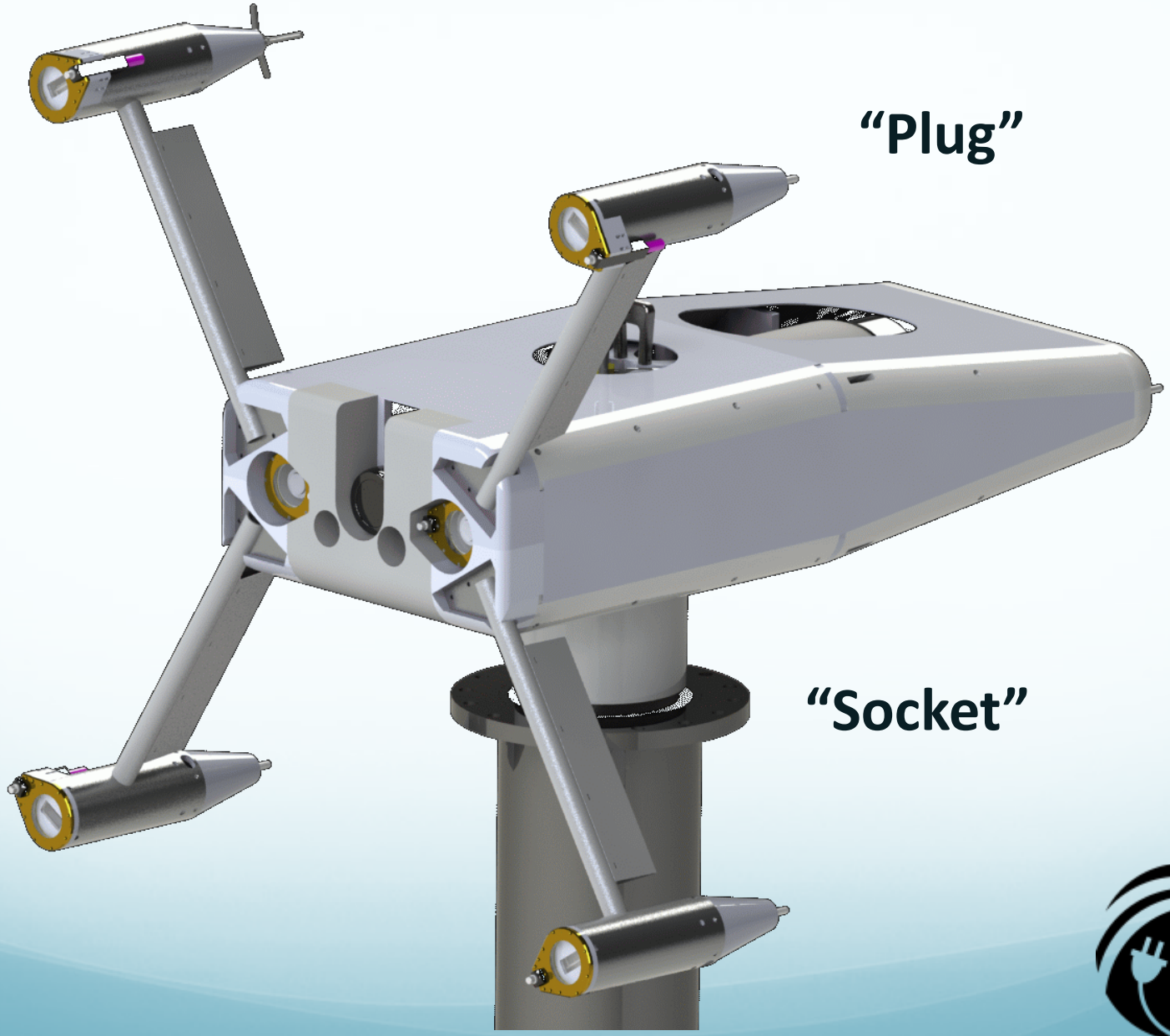

NNMREC
Northwest National Marine
Renewable Energy Center

AMP Infrastructure and Instrumentation

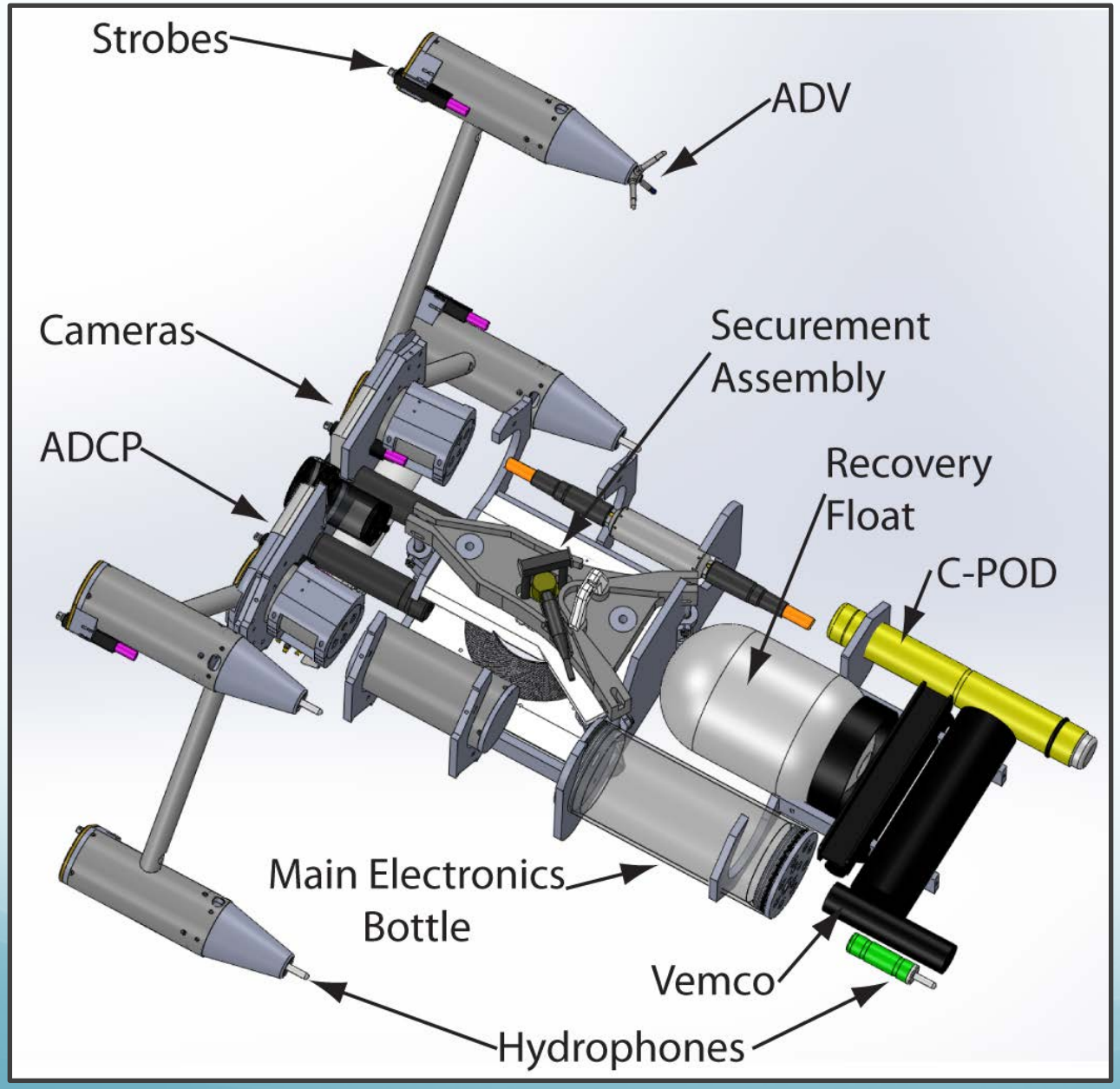

- **Power and data infrastructure**
- **Securement and recovery system**
- **Instruments**

NNMREC
Northwest National Marine Renewable Energy Center

AMP Integration: Tidal Energy

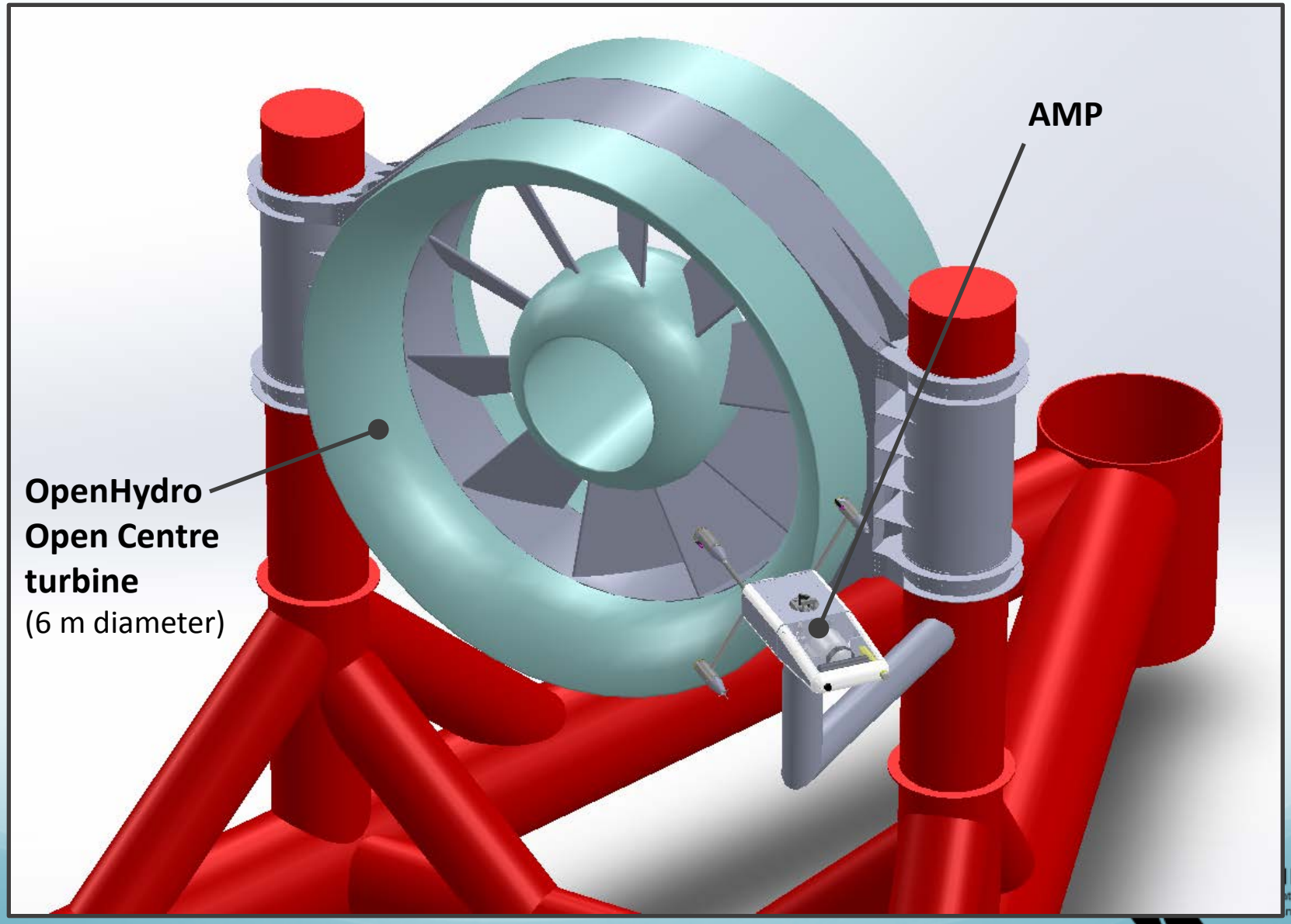

Recovery/Deployment Options

~~Divers~~

- Short work windows
- Human safety risk

~~Converter Recovery~~

- Can be expensive and risky

~~Subsea Winch~~

- Moving parts in the ocean
- Winch failure can cause catastrophic system failure

ROV Servicing

- Short work windows

NNMREC
Northwest National Marine Renewable Energy Center

AMP Operations Concept: Tidal Energy

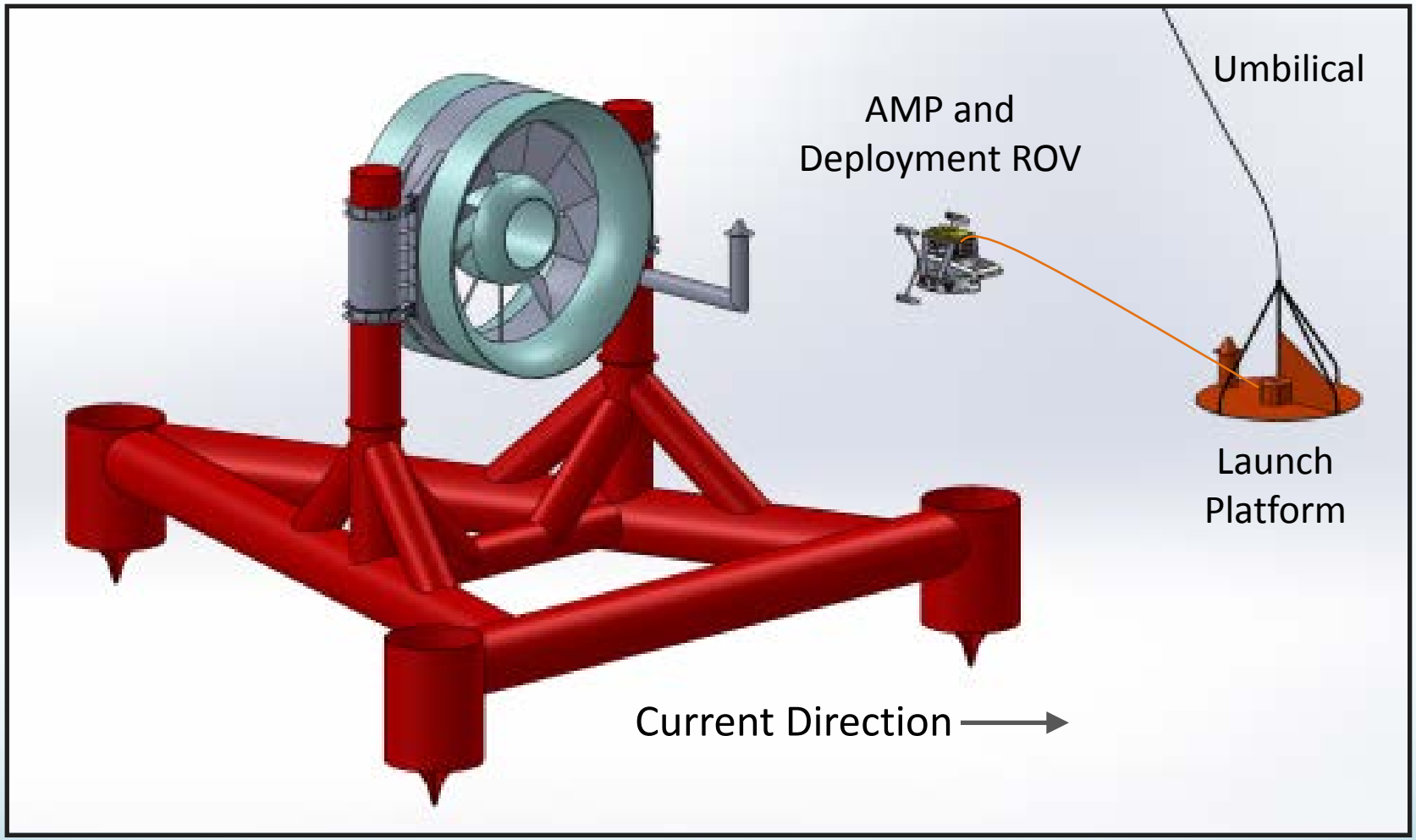

NNMREC
Northwest National Marine
Renewable Energy Center

“Millennium” Falcon Deployment System

SAAB SeaEye Falcon

- Inspection-class ROV
- 4 Vectored Thrusters

“Millennium” Skid

- 6 Thrusters
  - 4 Vectored
  - 2 Vertical
- Docking alignment
- Securement actuators
- Power and comms (SeaView)

NNMREC
Northwest National Marine Renewable Energy Center

System Stability

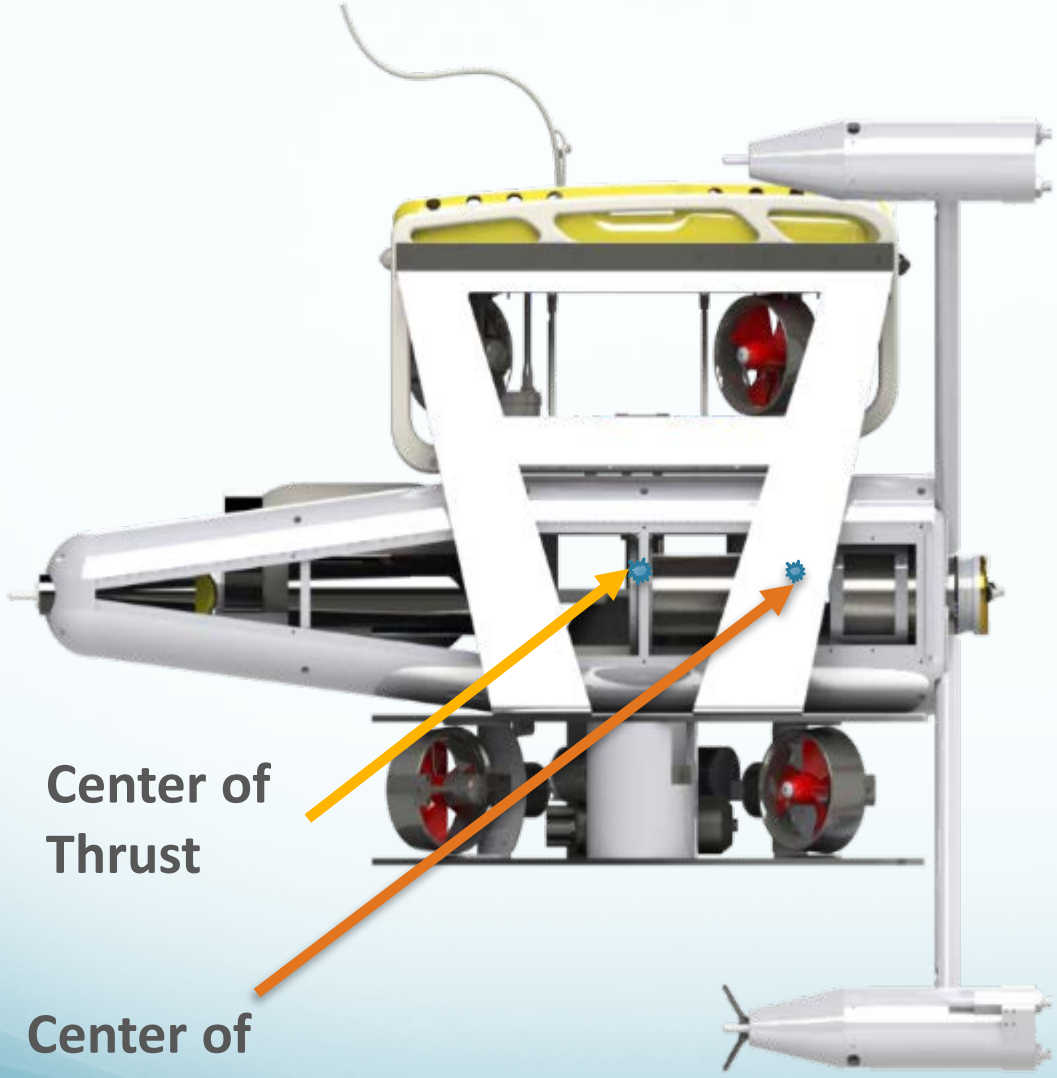

- **Center of Thrust and Center of Pressure**
  - Vertical alignment to prevent pitching
  - Horizontal alignment may require adjustment, pending field trials

NNMREC
Northwest National Marine Renewable Energy Center

Summary

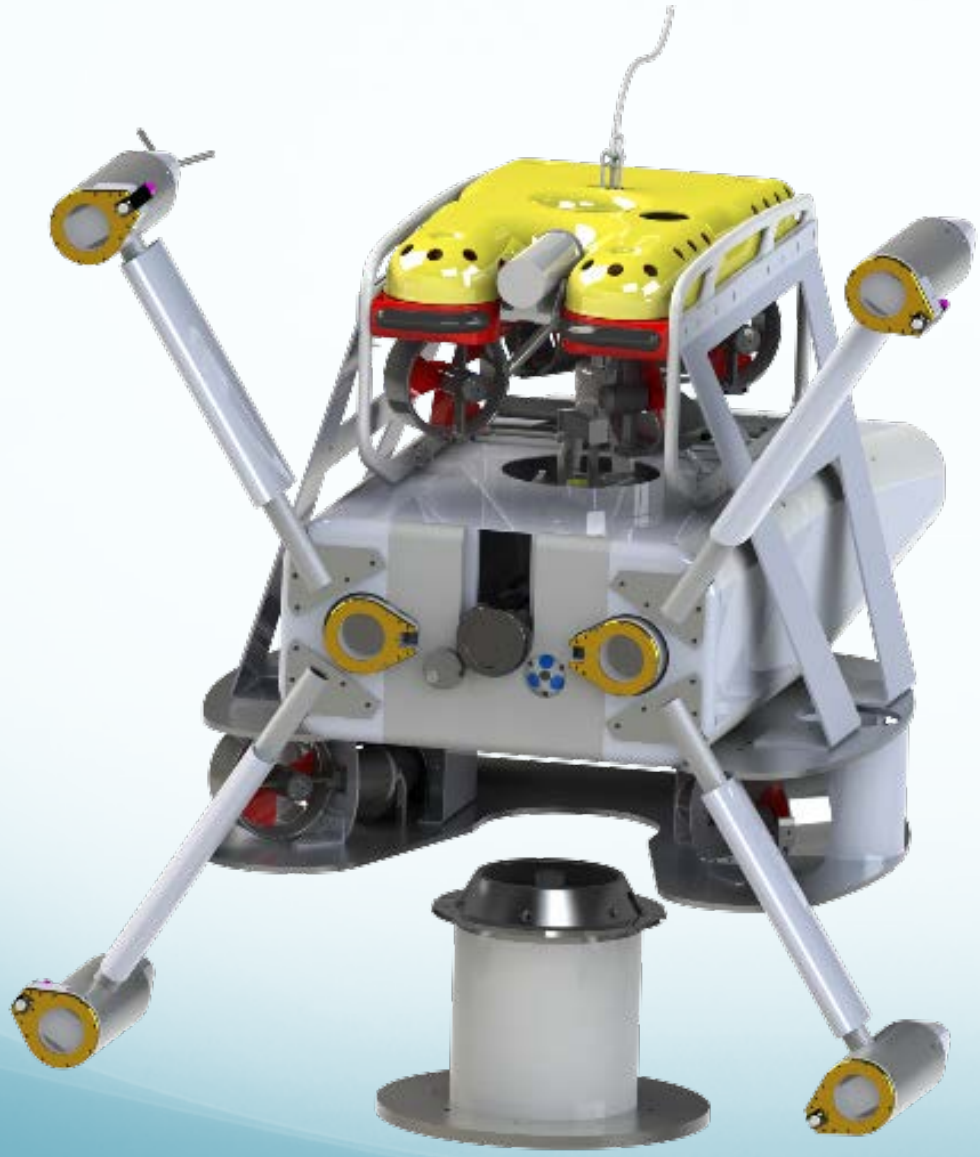

- Integrated instrumentation packages will play a critical role in reducing environmental risk without incurring large data mortgages
- Package design requires a significant systems engineering effort

NNMREC
Northwest National Marine Renewable Energy Center

Acknowledgements

This material is based upon work supported by the Department of Energy under FG36-08GO18179-M001 and Snohomish Public Utility District.

The AMP represents the engineering efforts of the authors, as well as a broader team including Paul Gibbs (APL), Chris Siani (APL), Trina Lichtendorf (APL), Tom Jackson (Jackson Engineering), and Danny Miles (Snohomish PUD).